Procrastination Costs

A Guide to Proper Care & Maintenance of Masonry

AIA Approved Continuing Education

CCFM
CONFERENCE FOR CATHOLIC FACILITY MANAGEMENT
God is in the details.

Course Provider:
CCFM G460
No. BAL2305

CONTINUING EDUCATION AIA



Kevin A. Kalata
Principal
kkalata@wje.com
847-226-5399

WJE ENGINEERS ARCHITECTS MATERIALS SCIENTISTS
Wiss, Janney, Elstner Associates, Inc.

2023 Baltimore Conference

CCFM



WJE ENGINEERS ARCHITECTS MATERIALS SCIENTISTS

Wiss, Janney, Elstner Associates, Inc.

CCFM

CONFERENCE FOR CATHOLIC FACILITY MANAGEMENT

God is in the details.

Copyright Materials

- This presentation is protected by US and International Copyright laws. Reproduction, distribution, display and use of the presentation without written permission of the speaker is prohibited.

Continuing Education

Credit(s) earned on completion of this course will be reported to AIA CES for AIA members. Certificates of Completion for both AIA members and non-AIA members are available upon request.

This course is registered with AIA CES for continuing professional education. As such, it does not include content that may be deemed or construed to be an approval or endorsement by the AIA of any material of construction or any method or manner of handling, using, distributing, or dealing in any material or product.

Questions related to specific materials, methods, and services will be addressed at the conclusion of this presentation.



Course Description

Masonry walls have historically been a very durable system. Although a durable system, masonry walls required routine maintenance to provide the long service life we all expect. When routine or proactive preventive maintenance is deferred, severe damage can occur requiring costly repairs.

This course will provide an overall review of common stone and brick masonry systems including 1) Historic mass masonry walls, 2) Mid 20th century composite masonry construction, and 3) Contemporary masonry clad veneer walls. Common problems associated with each of the systems will be covered. Also, recommended maintenance and repair details and techniques will be covered. The recommended maintenance will cover both planned routine maintenance designed to prevent deterioration or distress to the masonry, and maintenance required to correct observed conditions that could occur.

Learning Objectives

- Be able to identify the characteristics and performance of the different masonry wall construction systems including, mass masonry, composite masonry, and veneer masonry systems.
- Be able to understand routine maintenance requirements for brick and stone masonry systems.
- Be able to identify observed conditions that require immediate maintenance or correction.
- Become familiar with proper maintenance and repair details and techniques.

Outline

- **Masonry Overview**
  - **Types (clay brick, concrete, stone)**
  - **Masonry Systems**
    - Mass Wall
    - Composite Masonry
    - Masonry Veneer
- Common Masonry Issues

  …& Associated Maintenance & Repair
- Developing a Maintenance Plan







Masonry Overview
Masonry Terminology & Bond Types

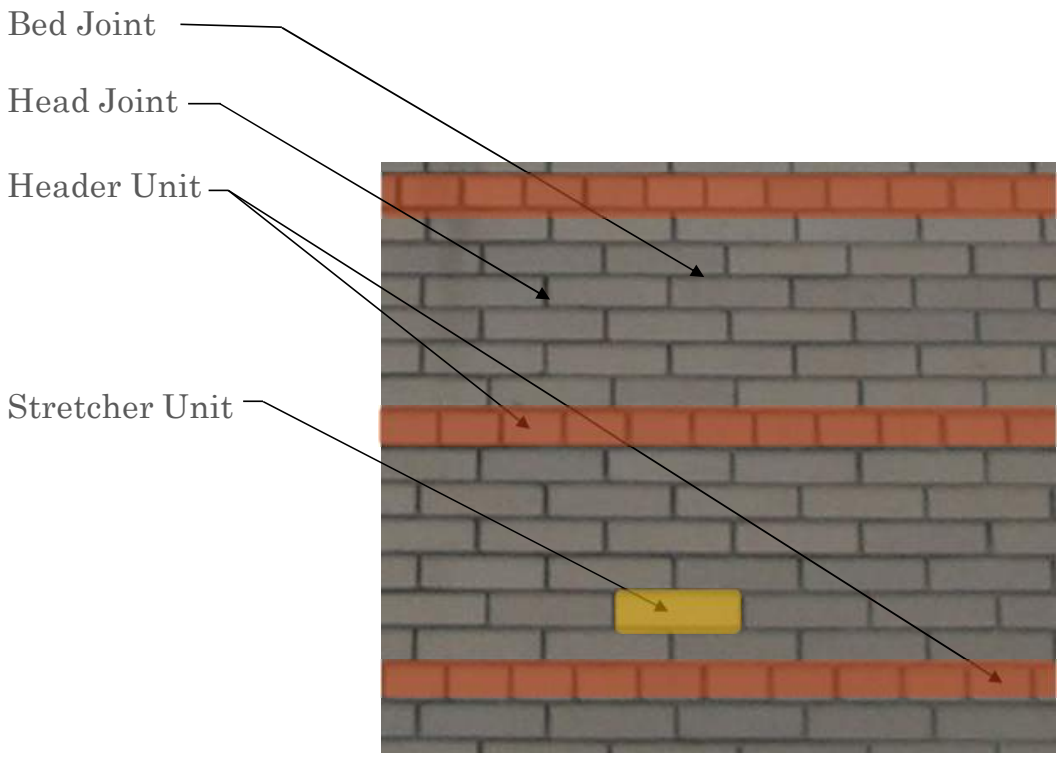

Masonry Wall Terminology

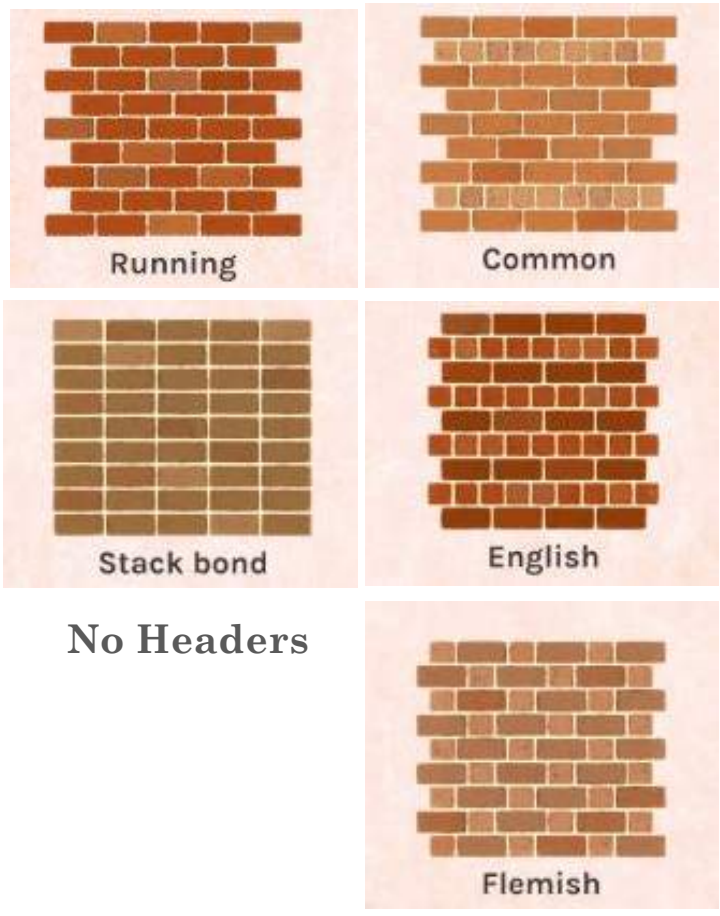

No Headers

Header Bonded

Masonry Overview
Masonry Systems

- **Mass Wall**
  - Dates back to 7,000 B.C.
  - Multi-wythe masonry
  - Structural (gravity & lateral support)
  - Header bonded (examples include)
    - Common
    - English
    - Flemish
  - Uses mass to manage
    - Moisture
      - Sheds bulk water
      - Absorbs, stores, and later releases
    - Heat Flow
      - Thermal mass
      - Heat capacity exceeding: 7 BTU/ft^{2}xF

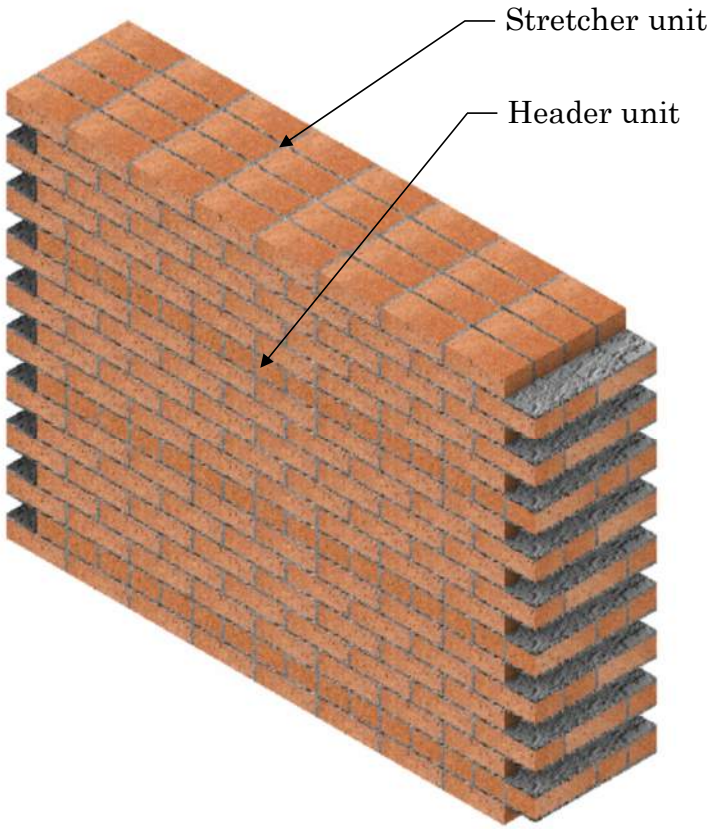

Masonry Overview
Masonry Systems: Mass Wall



Exposed headers in mass masonry wall



Masonry Overview
Masonry Systems: Mass Wall



Monadnock Building

- Built 1891
- 16-story “skyscraper”
- Tallest load bearing brick building
- Walls are 6 ft. thick at the base



Masonry Overview
Masonry Systems

Composite Masonry

"multicomponent masonry members acting with composite action"

- NCMA

Composite Action

Binding together of two or more load-carrying structural members to act together as a single unit

Composite Masonry

"multicomponent load carrying masonry members bound together to act as a single unit"

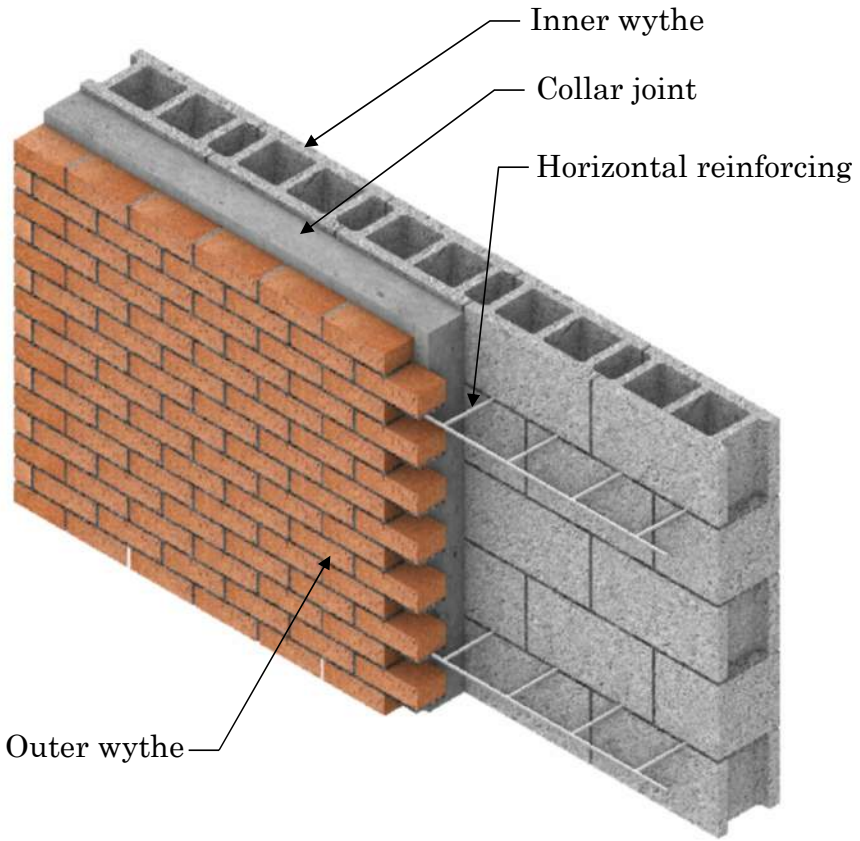

Masonry Overview
Masonry Systems: Composite Walls

- Multi-wythe masonry
- Mechanically or header bonded
- Collar joint
  - Grout filled
  - Mortar filled
  - Open (hollow wall w/ composite action)
- Load bearing or infill walls

Considerations

- Differential movements between dissimilar material
  - Moisture movement
  - Thermal movement
- Moisture management challenges

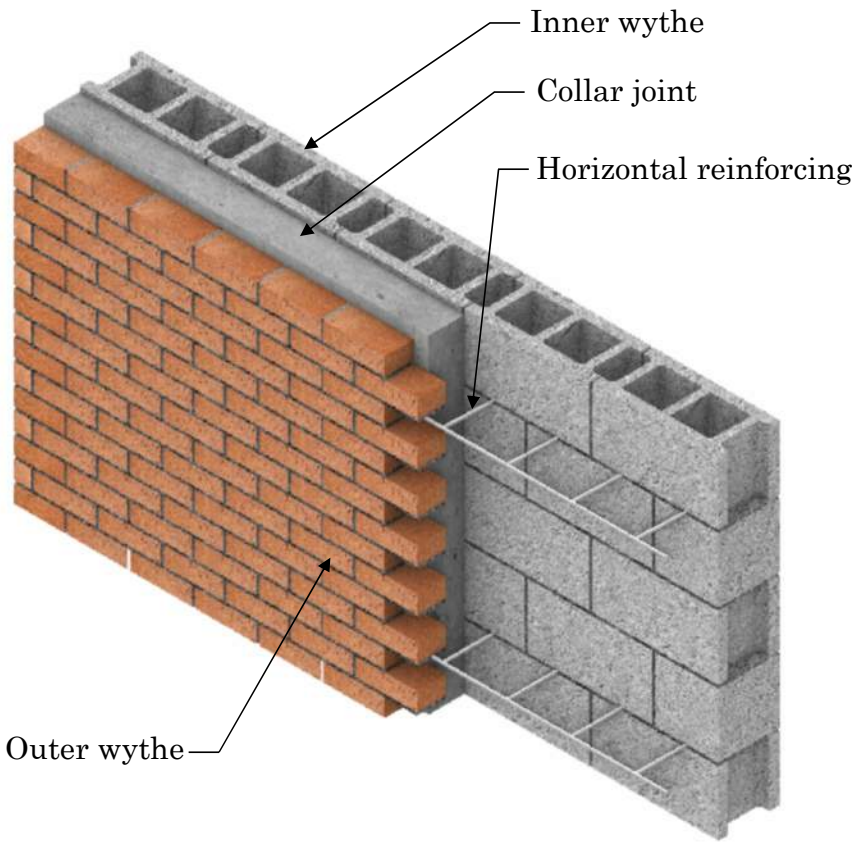

Masonry Overview
Masonry Systems:

- **Masonry Wall Combinations**
  - Mass & Composite Walls in combination with alternate load carrying structural framing
    - Steel framing
    - Wood framing
    - Reinforced concrete framing

Considerations (similar)

- Differential movements between dissimilar material
- Moisture management challenges
  - Corrosion of embedded steel
  - Decay of embedded wood

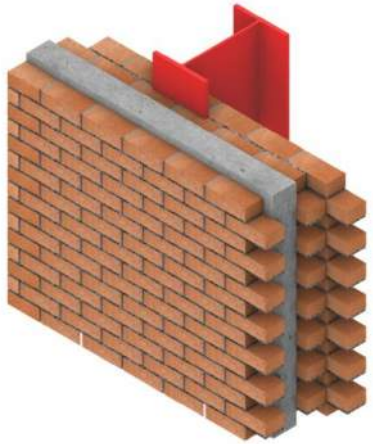

Multi-wythe masonry with embedded steel framing

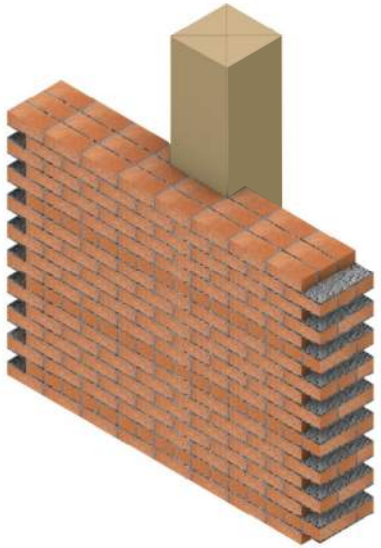

Mass masonry with embedded wood framing

Masonry Overview
Masonry Systems:



Corroded steel columns embedded in masonry





Masonry Overview
Masonry Systems:



Wood columns embedded in masonry

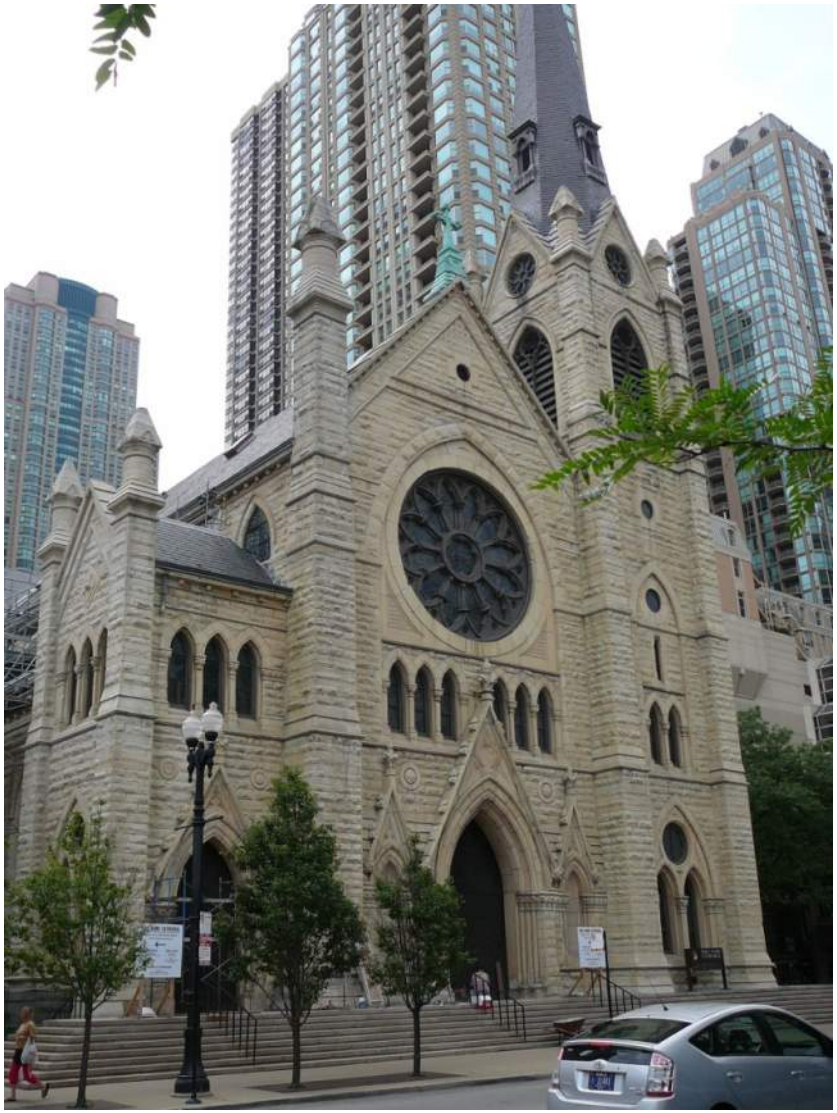

Masonry Overview
Masonry Systems

- **Masonry Veneer**
  - 1780 (England)
  - Non-structural veneer separate from backup
  - Veneer attachment
    - Mechanical
    - Adhered
  - Material Options:
    - Brick, concrete, stone, etc.
  - Moisture management
    - Sheds bulk water
    - Relies on moisture barriers, flashings, etc. (at backup wall plane)
    - May incorporate air barrier
      - Vapor permeable / non-vapor permeable
  - Thermal performance
    - Allows for continuous insulation

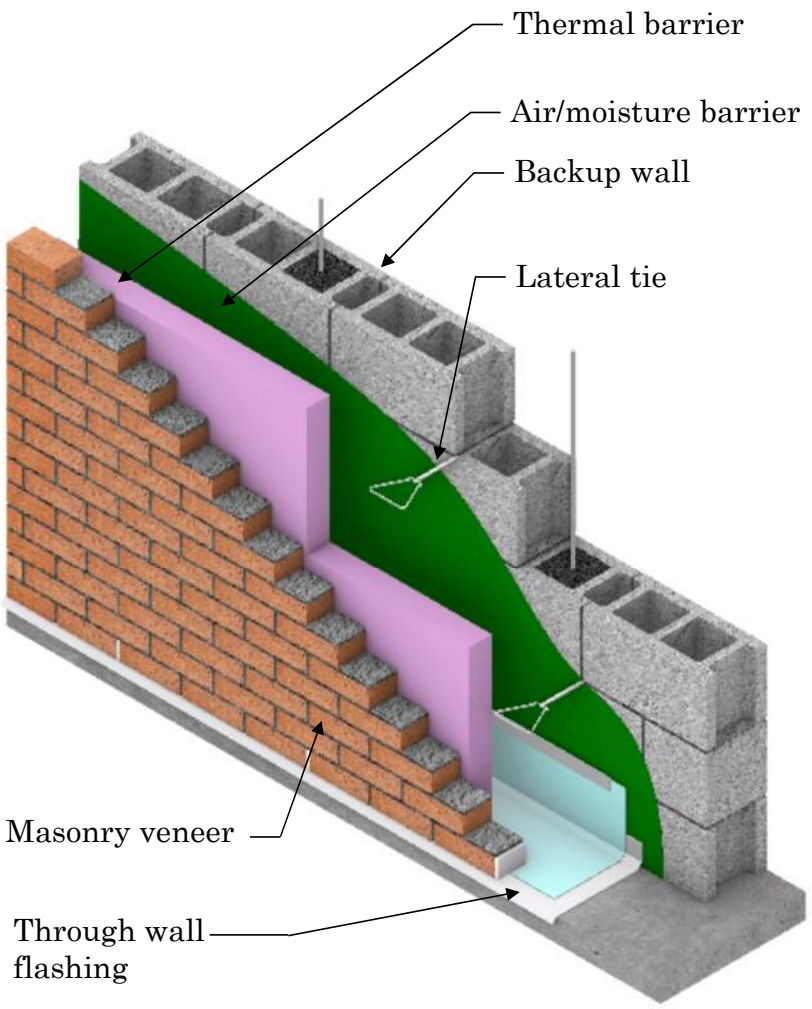

Masonry Overview
Masonry Systems: Masonry Veneer

- **Benefits**
  - Structural system separate from veneer & protected by
    - Continuous air & moisture barrier
    - Continuous thermal barrier





Outline

- Masonry Overview
  - Types of Masonry (clay brick, concrete, stone)
  - Masonry Systems
    - Mass Wall
    - Composite Masonry
    - Masonry Veneer
- **Common Issues, Distress, & Deterioration**

  …& Associated Maintenance & Repair
- Developing a Maintenance Plan







Common Issues, Distress, & Deterioration

Mortar Distress

- Deferred Maintenance



Erosion / Debonding / Voids





Common Issues, Distress, & Deterioration
Mortar Distress

- Improper Repairs

Skim coating









Common Issues, Distress, & Deterioration

Mortar Distress:

- Improper Repairs



Incompatible mortar



Shrinkage cracks (poor curing)

Masonry Maintenance
Grinding & Pointing

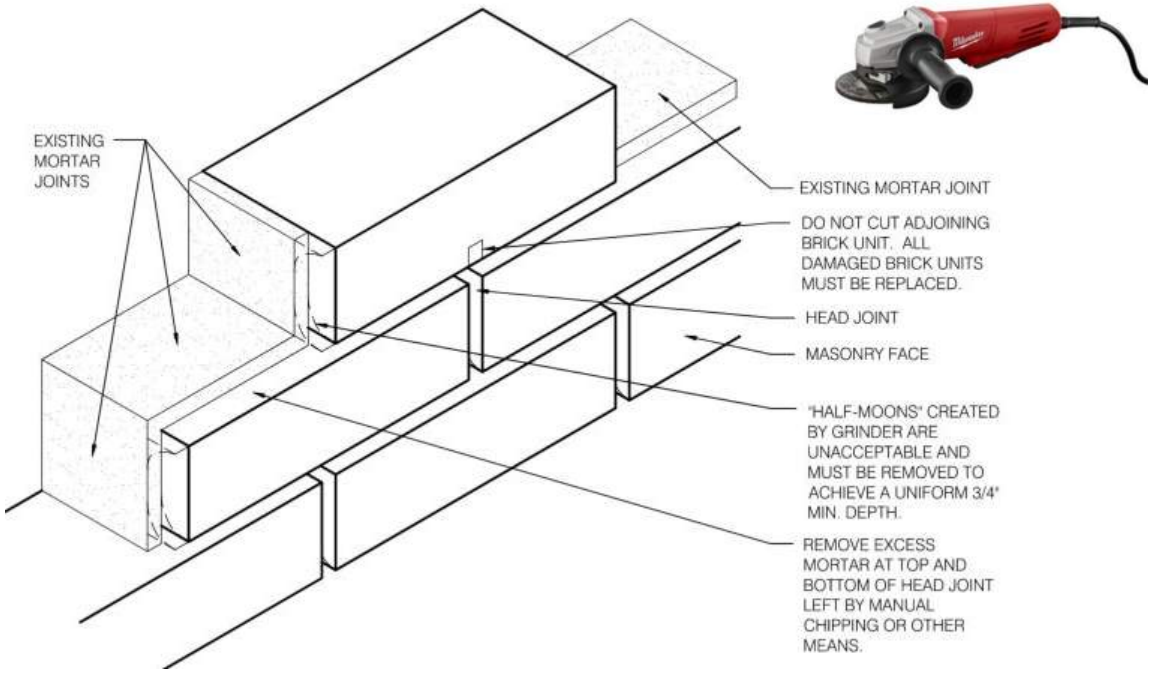

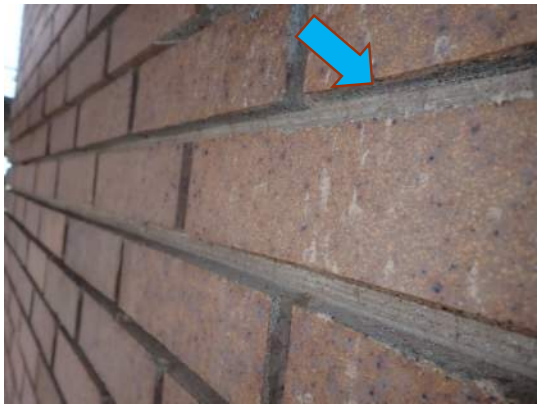

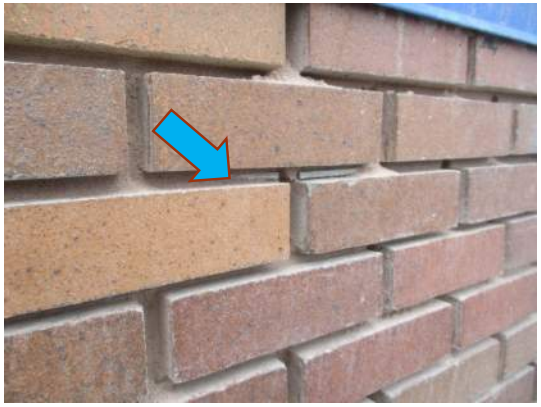

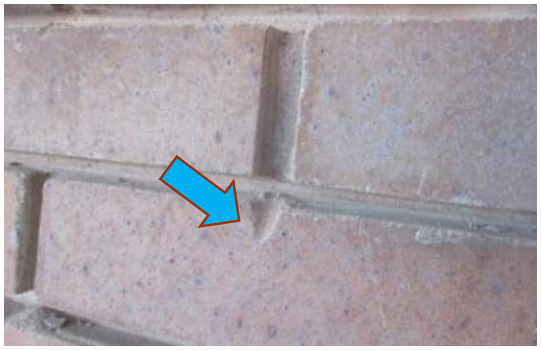

Grinding Procedures

- Grind ¾ in. minimum depth*
- Remove mortar from all surrounding edges
- Do not cut ties
- Avoid overcuts / damage



Masonry Maintenance
Grinding & Pointing

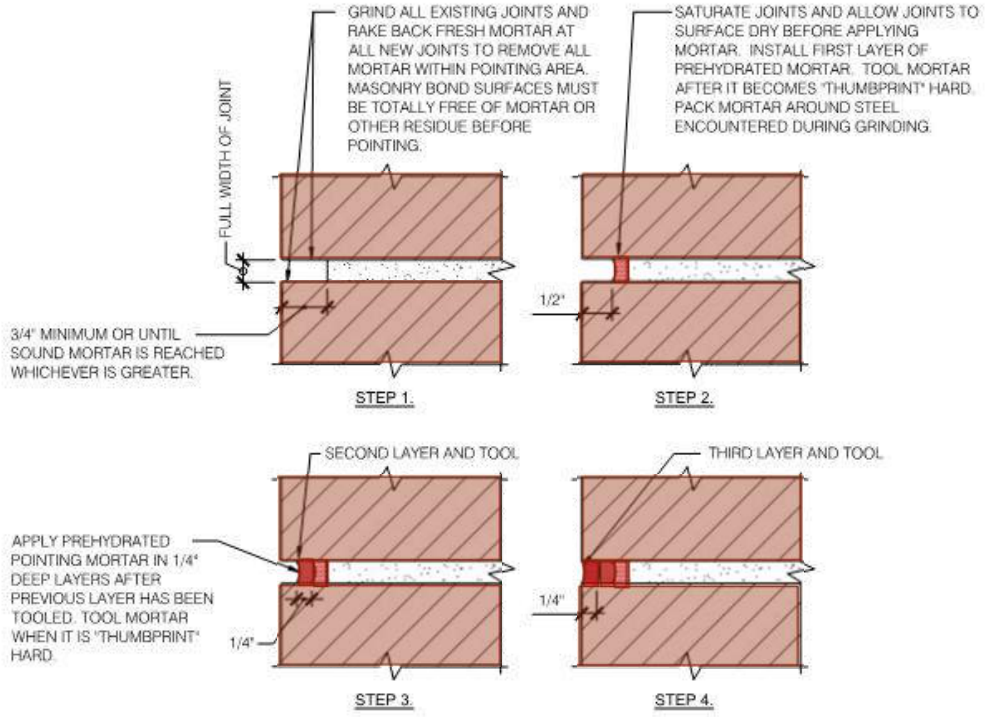

Pointing Procedures

- Dampen masonry & pre-hydrate mortar
- Point in multiple lifts
- Tool joints
- Moist cure







Masonry Maintenance & Repair
Pointing Mortar

Tooling Types

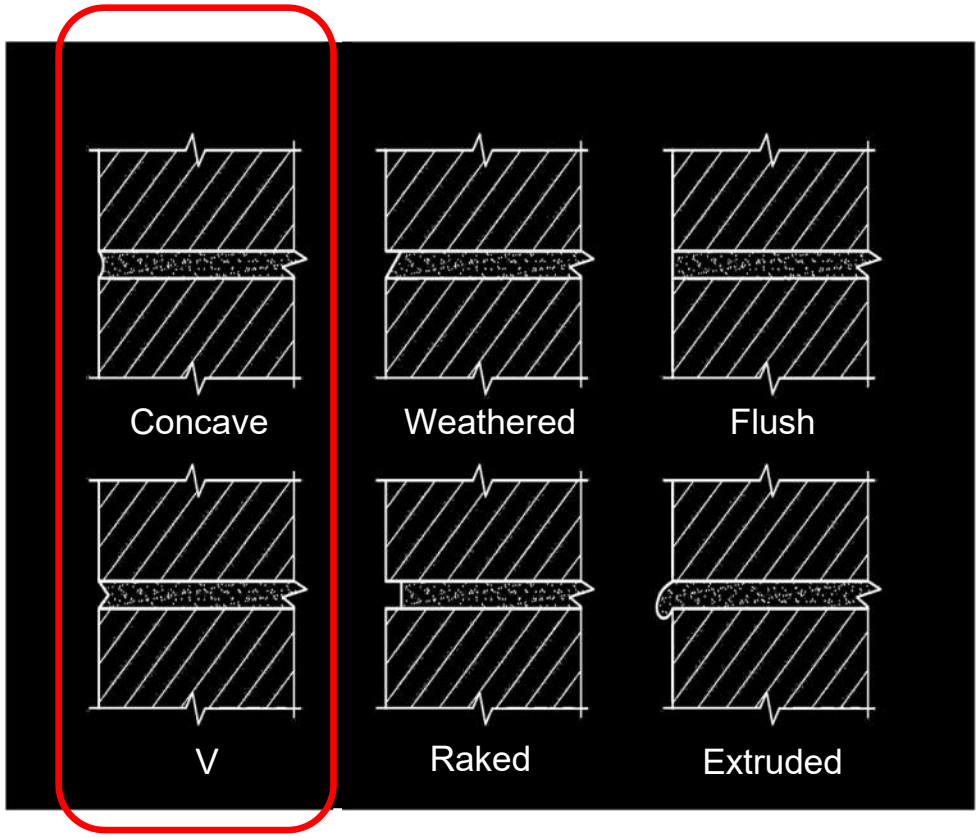

Recommended

Mortar Types

Type M
High strength, high shrinkage, low water retention, below grade usage

Type S
High bond strength, moderately high shrinkage, moderately low water retention, structural

Type N
Average bond strength, moderate shrinkage, moderately high water retention

Type O
Low shrinkage, low resistance to freeze/thaw, low strength, high water retention

Common Issues, Distress, & Deterioration

Composite Construction: Horizontal Cracking



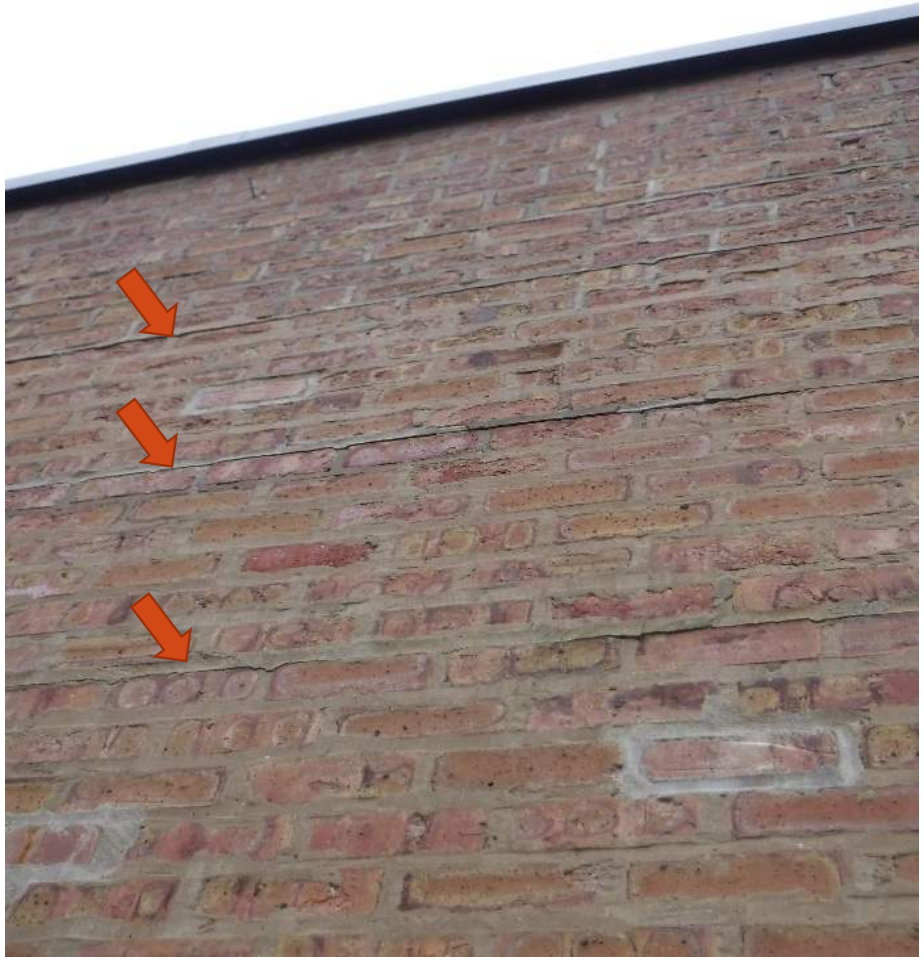

- Regularly spaced horizontal cracks
- Bond separations with some vertical displacement

Common Issues, Distress, & Deterioration
Composite Construction: Horizontal Cracking

- Regularly spaced horizontal cracks
- Bond separations with vertical displacement

- Corrosion of embedded bed joint reinforcement

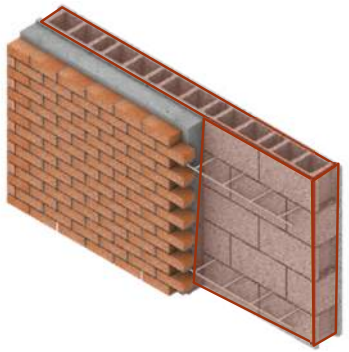

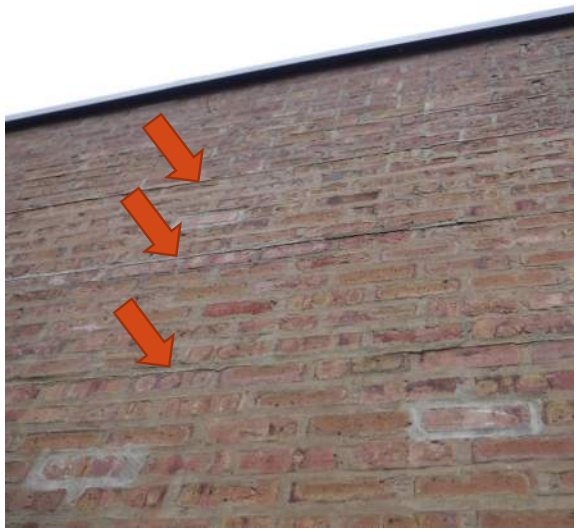





Masonry Maintenance & Repair
Composite Construction

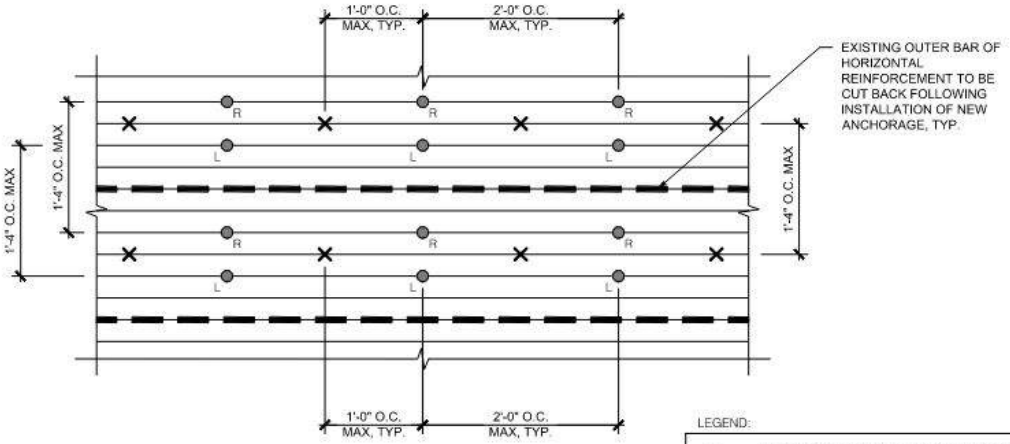

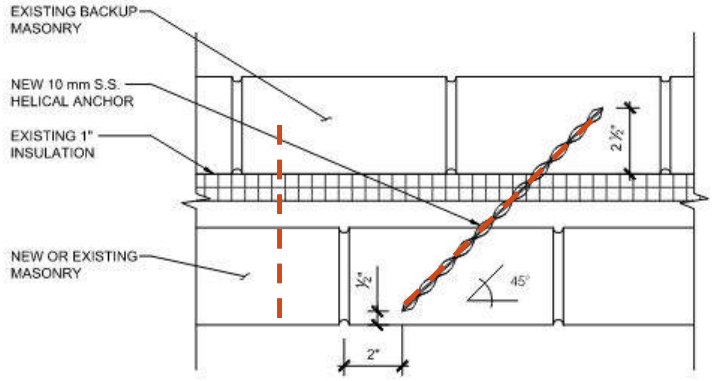



Repair Procedures

- Supplement anchors & ties
- Use cross pattern used to maintain shear transfer
- Grind out corroded reinforcing



Masonry Maintenance & Repair

Restoring Lateral Support

- Repair deficient in lateral support
- Secure shifted & bulged areas
- Temporary or long term stabilization

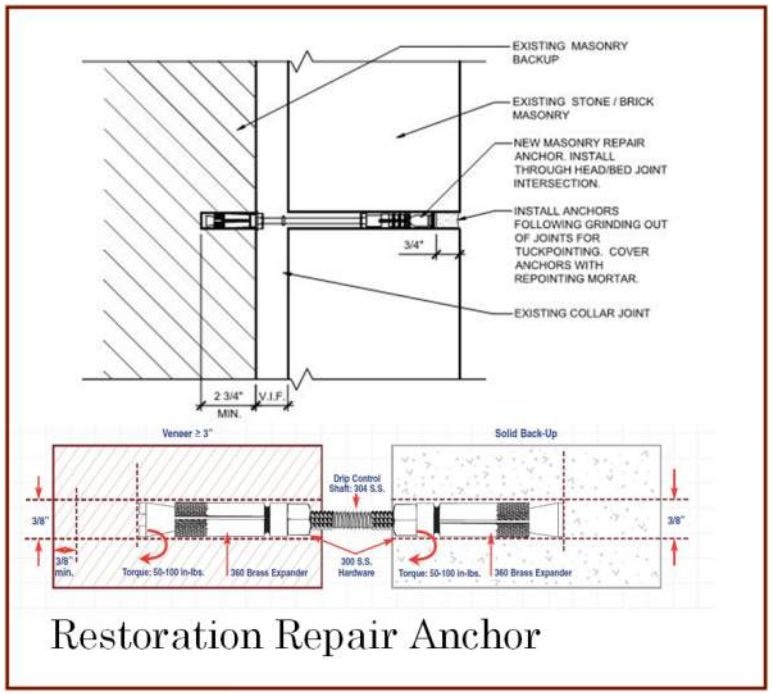

Restoration Repair Anchor





Helical Repair Anchor

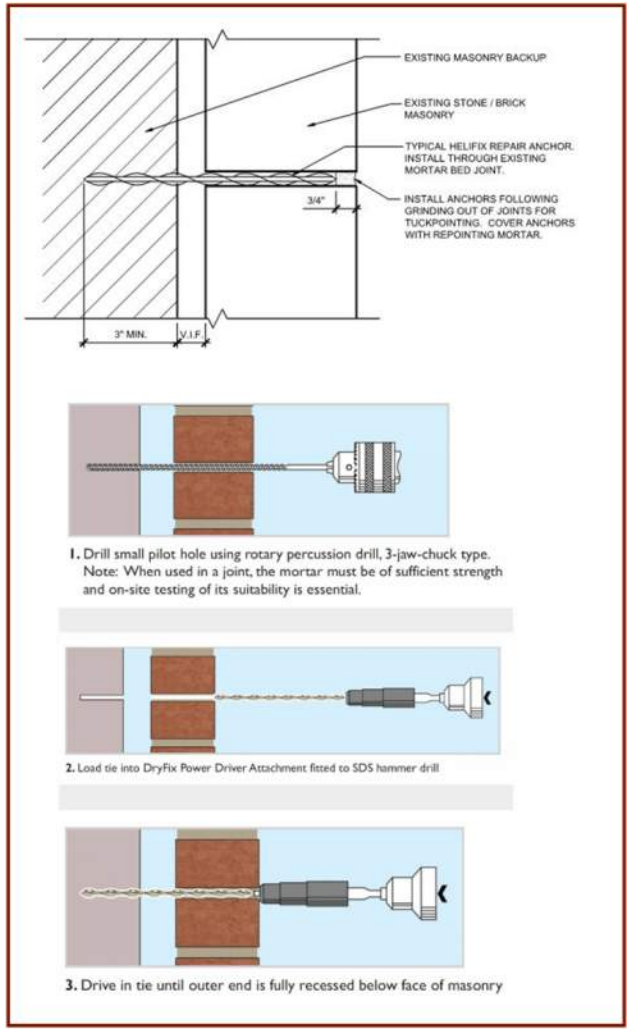

Common Issues, Distress, & Deterioration
Skyward Joints

Ledges, Sills, Watertables, Copings

- Higher Exposure
- Accelerated Erosion
- Moisture Damage
- Deterioration of underlying construction
- Leakage











Masonry Maintenance & Repair

Repairing Skyward Joints: Copings

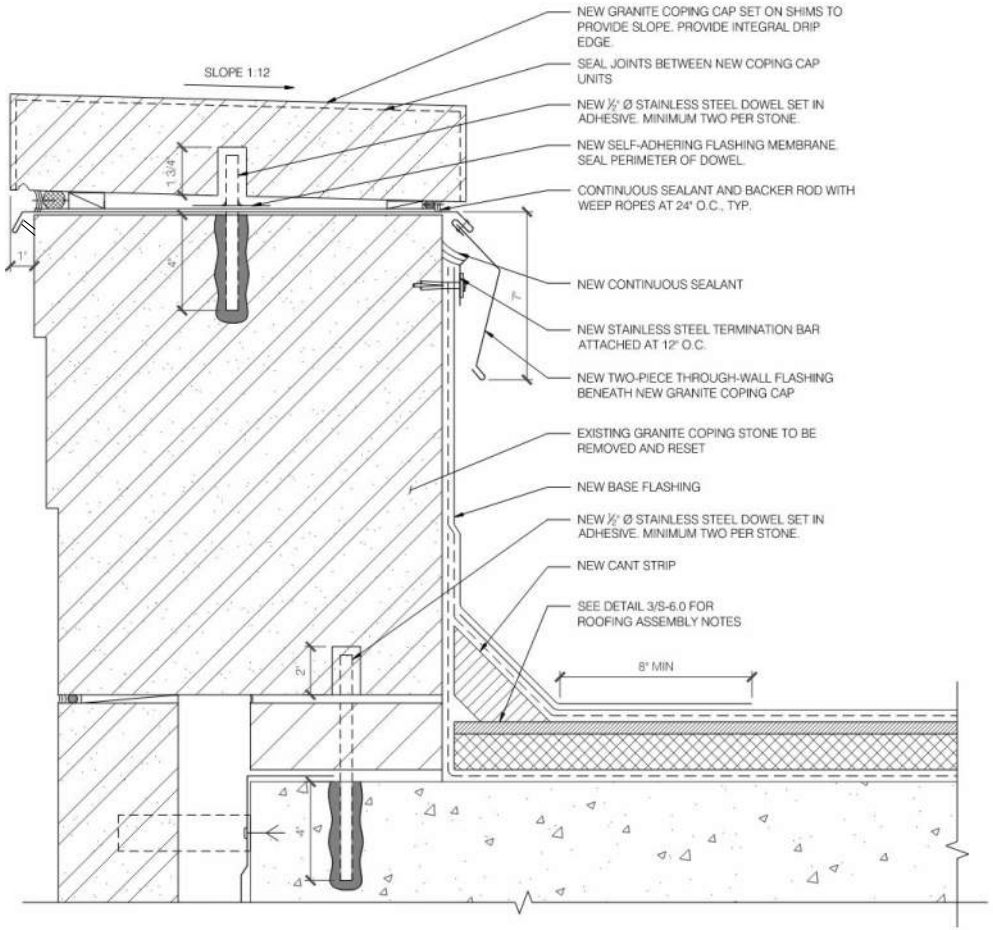

Through-Wall Coping Flashing Detail

Coping Repair Options

- Through wall flashing
- Metal Cap flashing

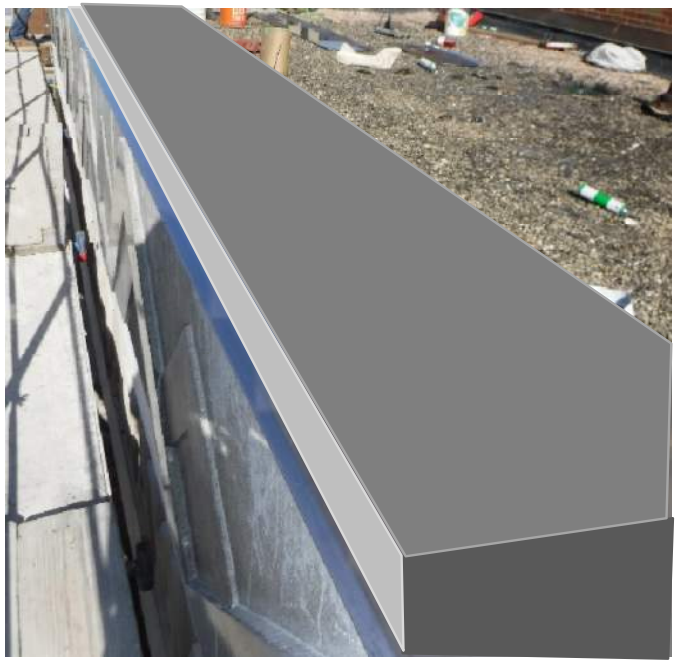

Coping Flashing In-Progress

Common Issues, Distress, & Deterioration

Water Leakage: Improper Interface Detailing



Who sees the problem?

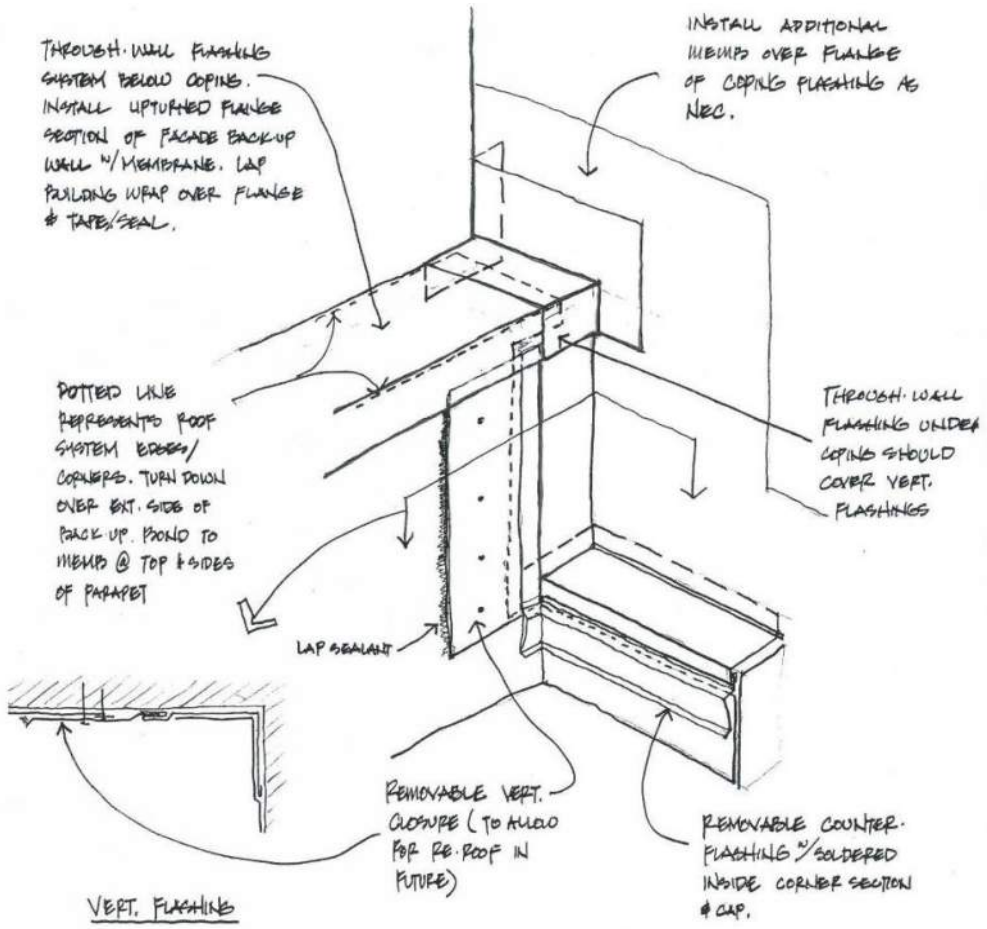

Masonry Maintenance & Repair
Parapet Interface Conditions



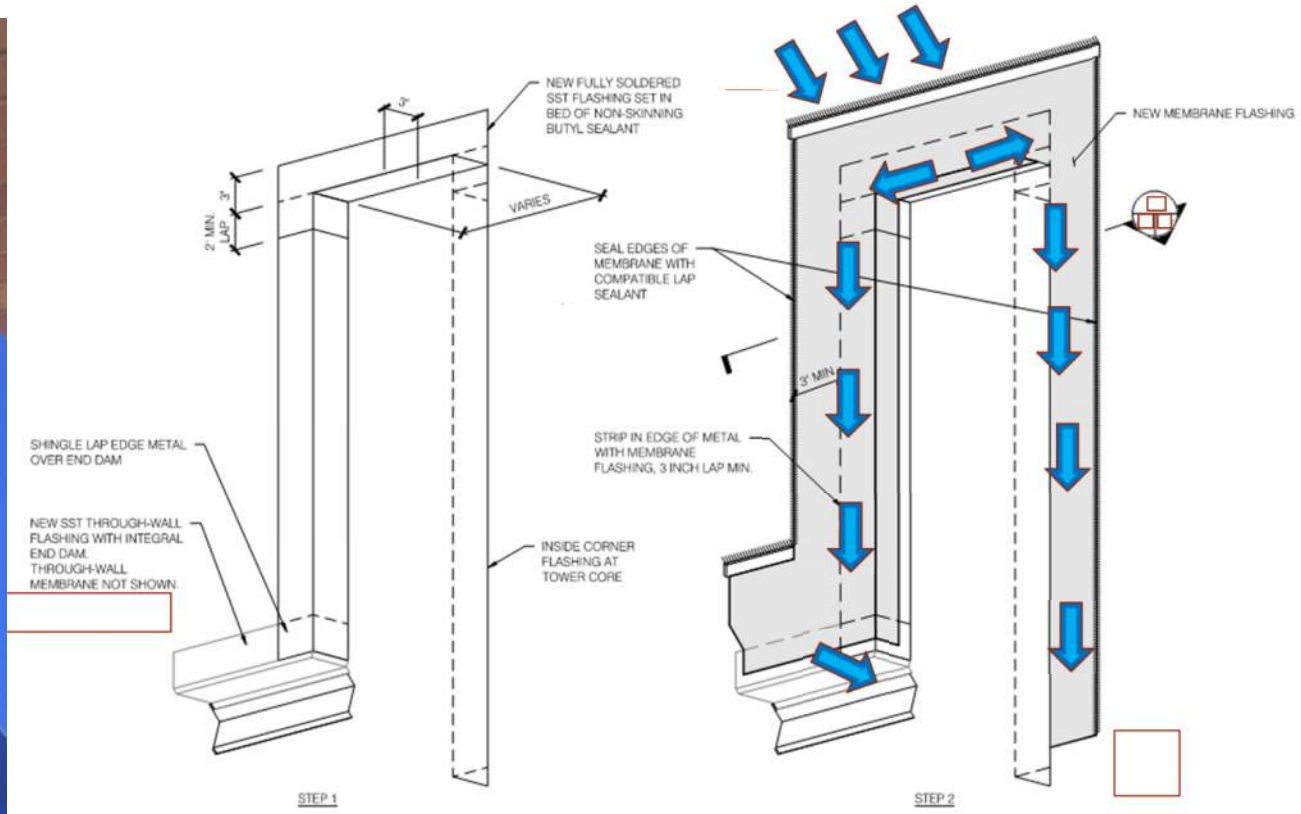

Saddle Flashing

Masonry Maintenance & Repair
Repairing Skyward Joints: Projections

Repair Options

- Weather cap
- Grind, point, rake, and seal
  - Avoid 3-sided adhesion
    - Backer Rod
    - Bond Breaker Tape

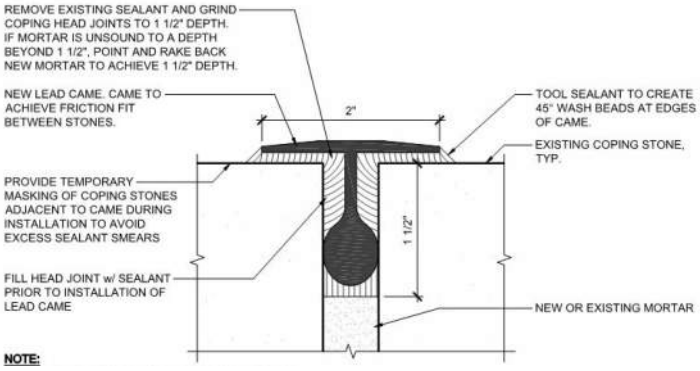

Lead Weather Cap "Came" Repair







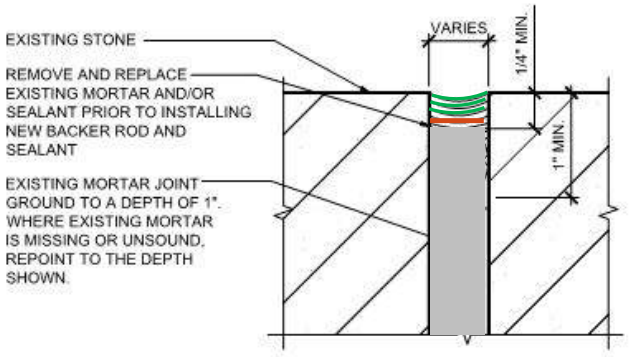

Skyward Joint Repair

Common Issues, Distress, & Deterioration

Jacking, Heaving, & Shifting

Corrosion of Embedded Steel

- Long term exposure to moisture
- Entrapped moisture
- Lack of proper flashing





Corrosion of embedded steel

Don't waste time or money with pointing these cracks w/out addressing the source of the problem





Common Issues, Distress, & Deterioration

Jacking, Heaving, & Shifting



Entrapped Moisture

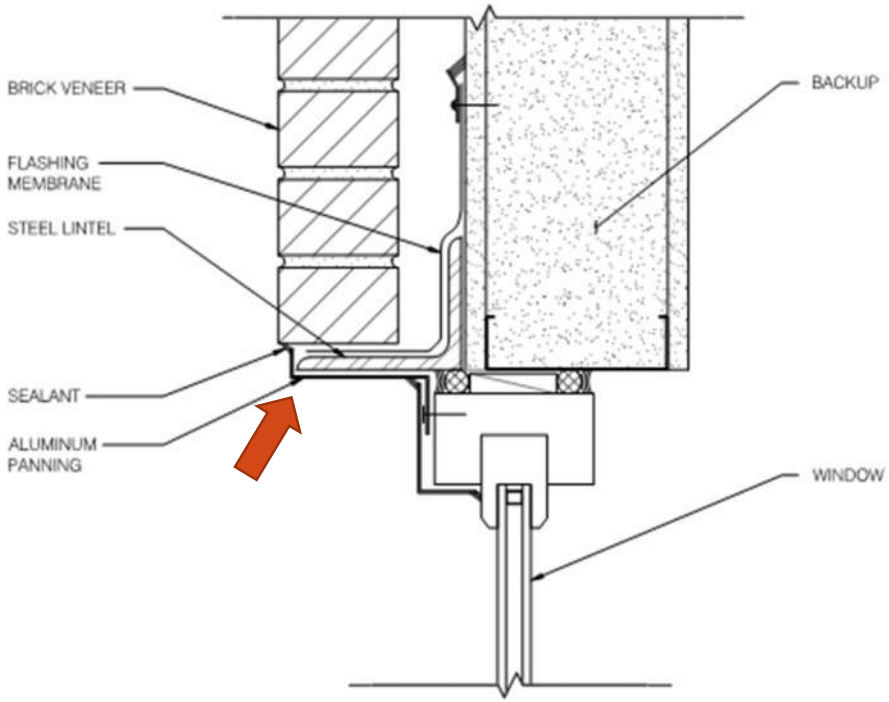

Common Issues, Distress, & Deterioration
Flashing

Through Wall Flashing

- Is this a good flashing or a bad flashing?

- Bad:
  - No extension or drip to direct water out of the wall cavity
  - No weeps

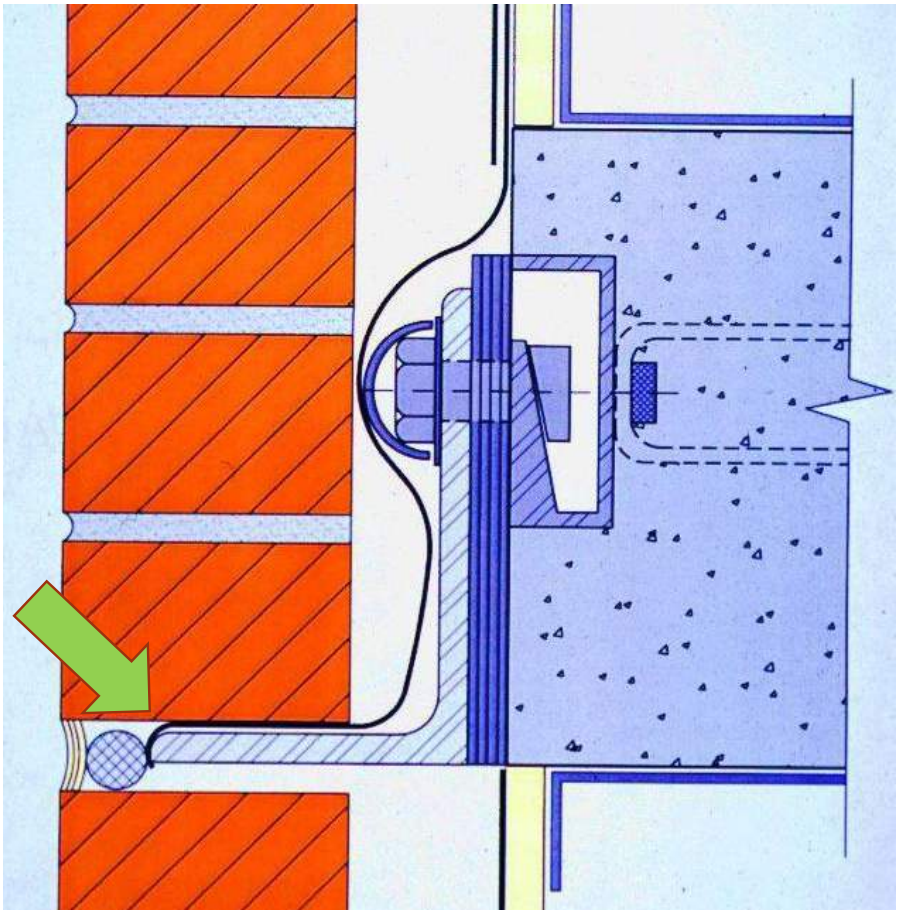

Common Issues, Distress, & Deterioration
Deficient Flashings



No drip, poor coverage, punctures, …



No end dam or integration



No drip or end dam ….and lack of extension

Common Issues, Distress, & Deterioration
Deficient Flashings



No vertical seal or termination



No vertical seal or termination

Masonry Maintenance & Repair
Flashings: Shelf Angle & Lintel

Well Designed Flashings:

- Continuous and durable
  - Pan flashings (preferred)
    - Stainless
    - Copper
    - Prefinished aluminum
- Integral drip edge
  - Hemmed edges preferred
- Integral end dams
  - Full soldered (ss & copper)
  - Back sealed & pop riveted (alum)
- Splice plates
- Vertical leg mechanically and adhesively secured
- Wept
- Sealed to restrict moisture ingress from below

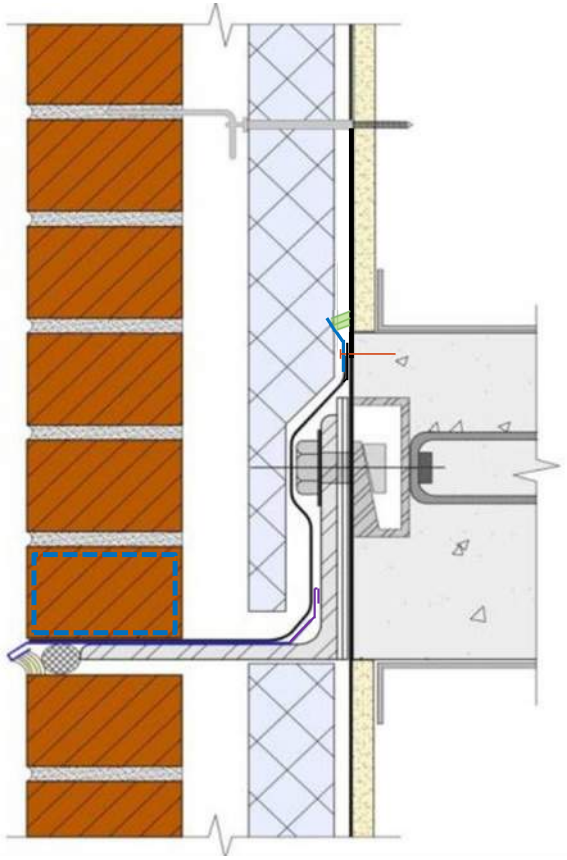

Through Wall Flashing

Masonry Maintenance & Repair
Flashings

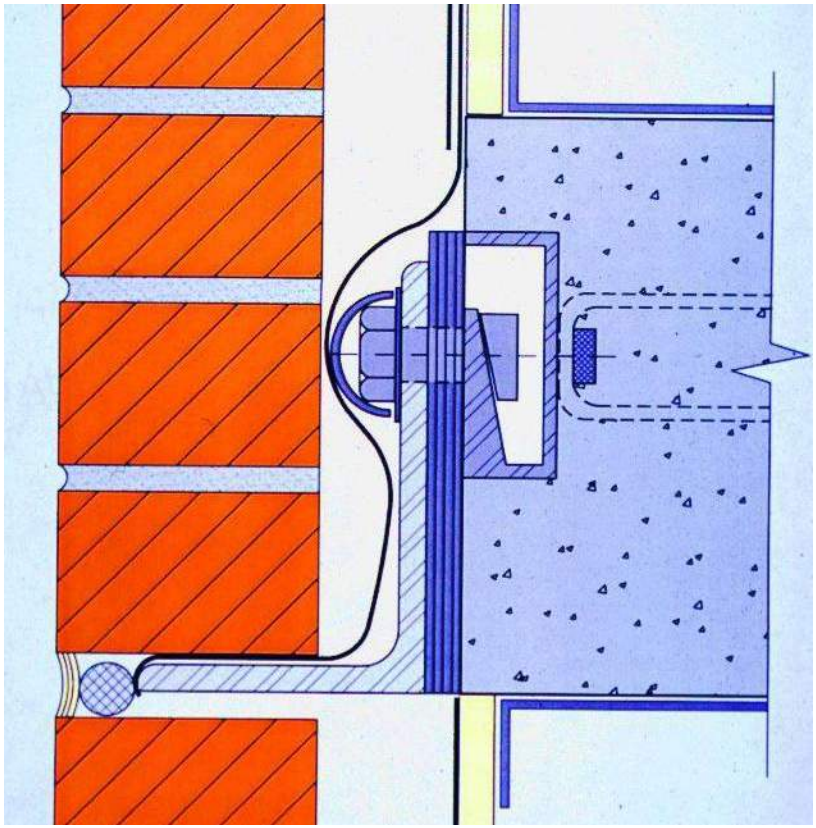

Poor Flashing

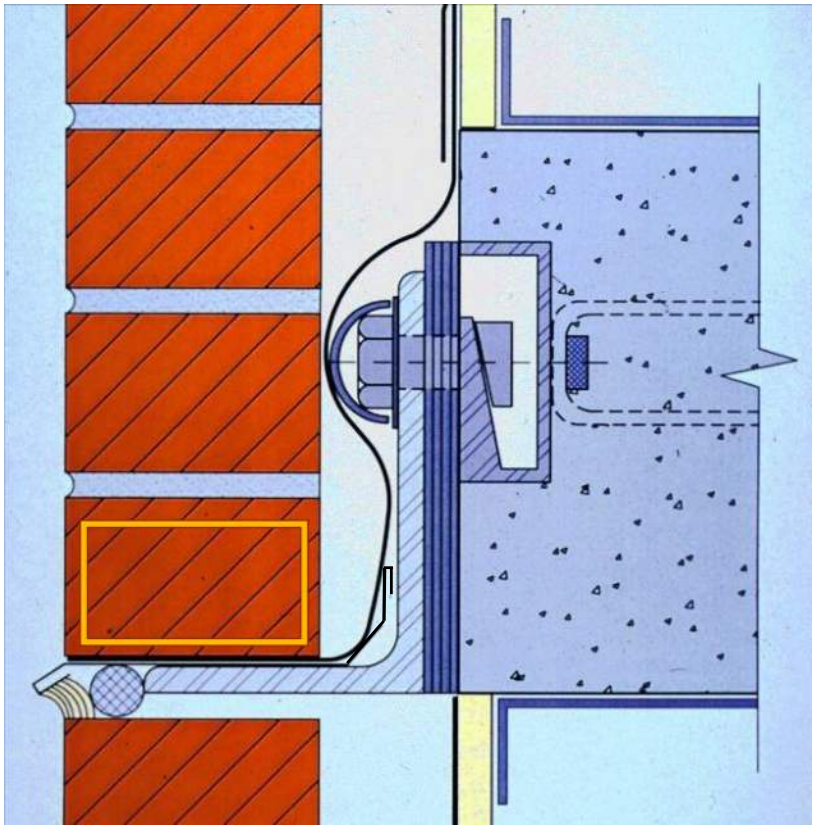

Good Flashing

Masonry Maintenance & Repair
Flashings: Shelf Angle & Lintel





Through Wall Flashing



Sealed termination bar





Weeps

Masonry Maintenance & Repair
Lintel / Shelf Angle Flashings

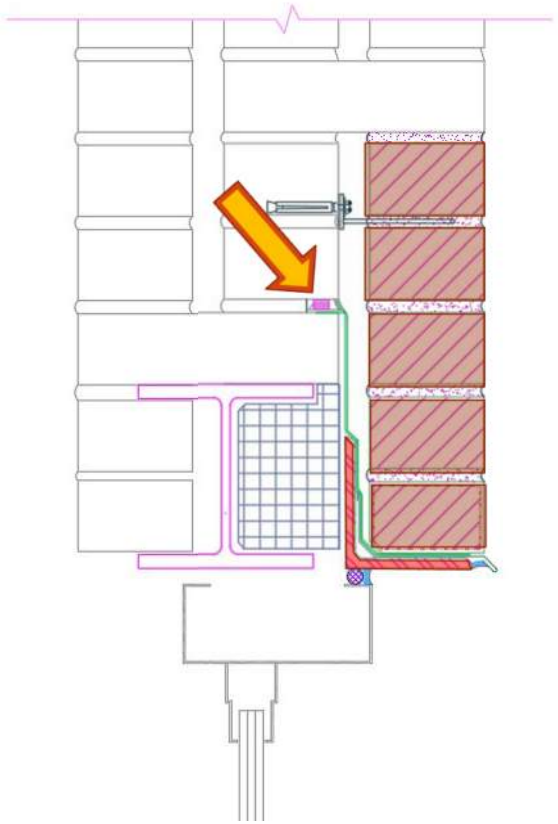

Lintel flashing repair detail



Common Issues, Distress, & Deterioration

Deficient Flashings: Roof / Wall Interfaces



Lack of continuity across the wall cavity



Masonry Maintenance & Repair
Base of Wall Flashings

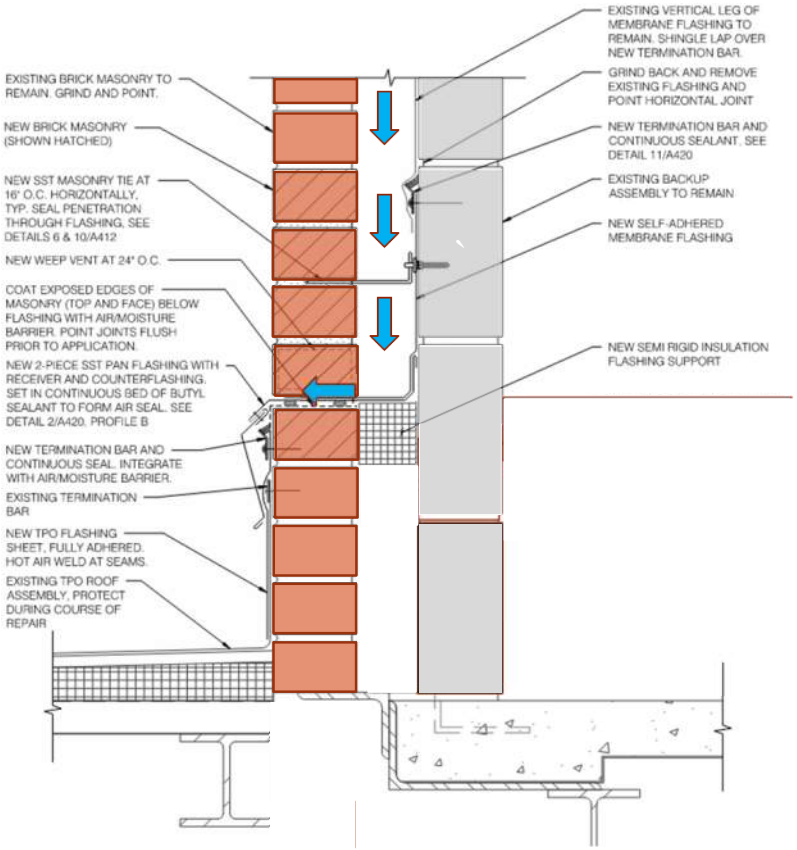

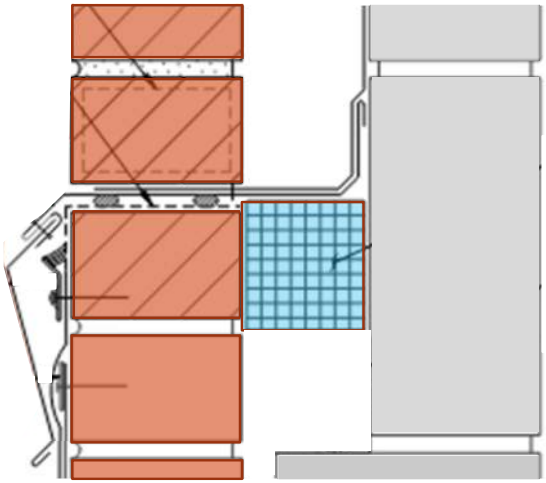



Common Issues, Distress, & Deterioration

Jacking, Heaving, & Shifting: Composite Wall w/ Steel







Corrosion of embedded steel

Masonry Maintenance & Repair
Jacking, Heaving, & Shifting

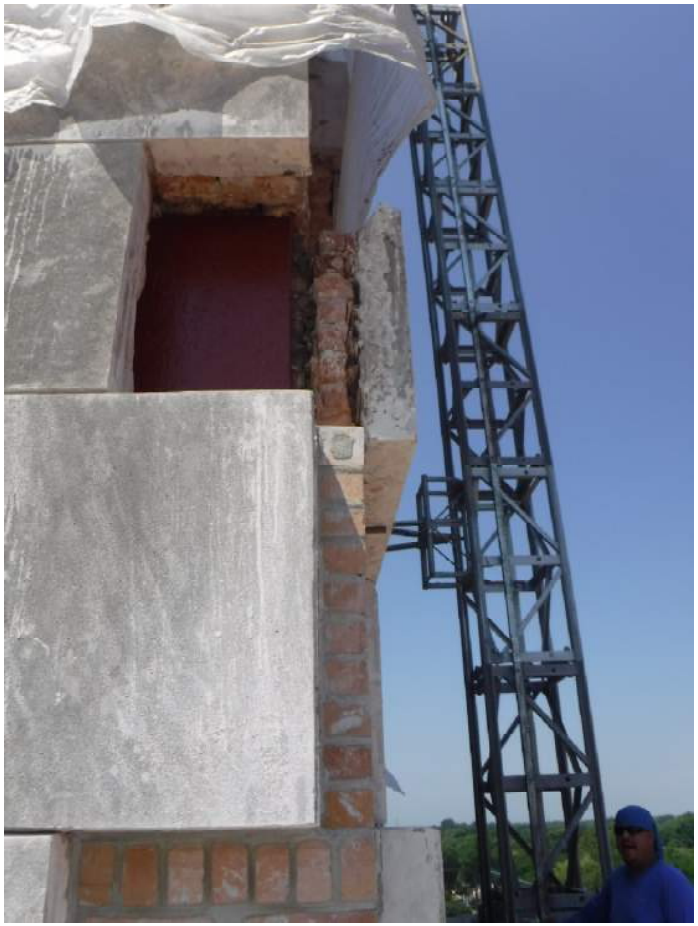





Repair Procedures

- Demolish cracked stone & loose masonry
- Clean, prime, paint steel
- Rebuild backup masonry (possible soft joint)
- Relay new stone with stainless anchorage

Common Issues, Distress, & Deterioration

Stone Masonry Spalling: Kerf Spalls







Corrosion of Embedded Anchorage

Common Issues, Distress, & Deterioration

Stone Masonry Spalling: Kerf Spalls

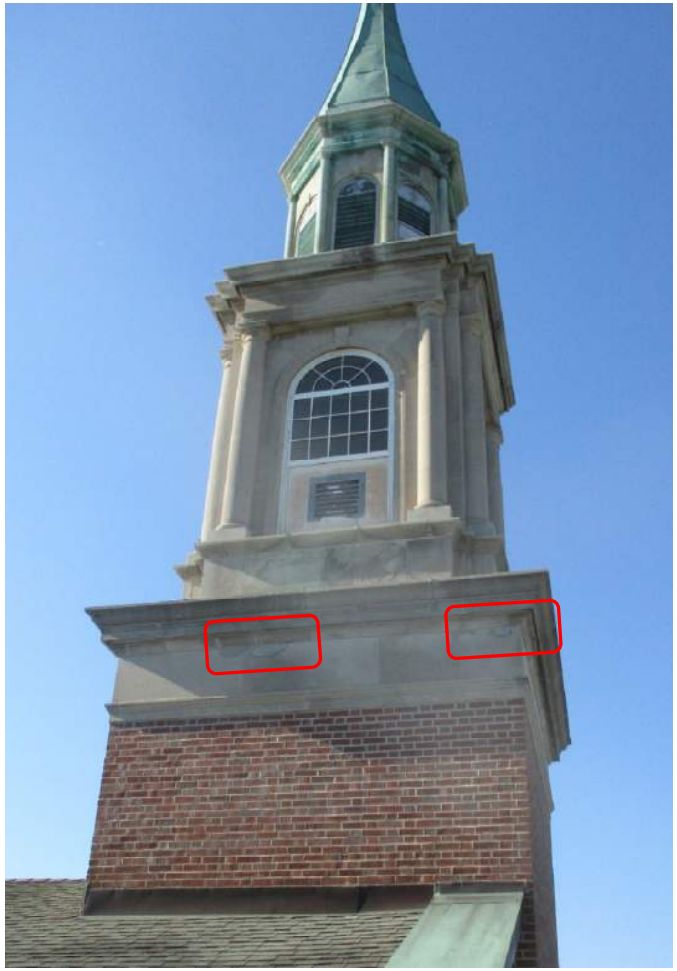



Kerf Spalls

- Common for older structures to include ferrous stone anchors
- Corroded kerf anchors create “half moon” spalls





Masonry Maintenance & Repair
Stone Kerf Spalls: Mortar Patch



Color Match Mockup

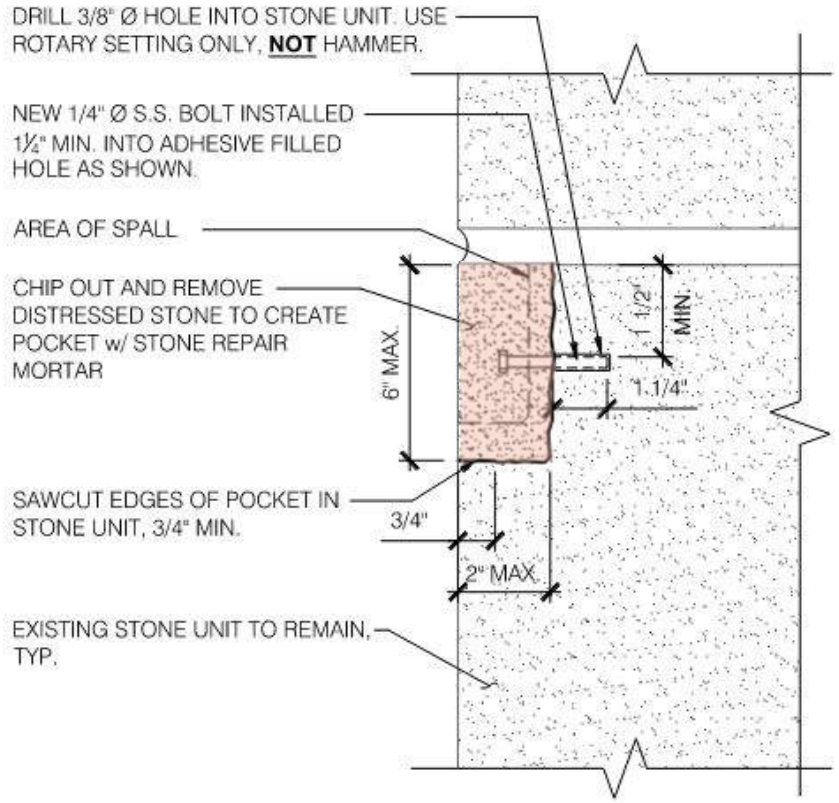

Mortar Patch Repair

Repair Options

- Stone Mortar Patch
- Stone Dutchman
- Full Replacement

Masonry Maintenance & Repair

Stone Kerf Spalls: Dutchman

Mechanical Anchors

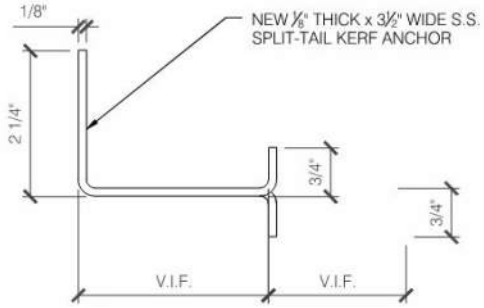

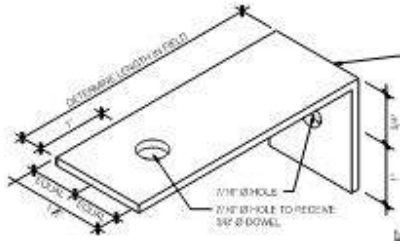

Use 300 series stainless steel anchorage



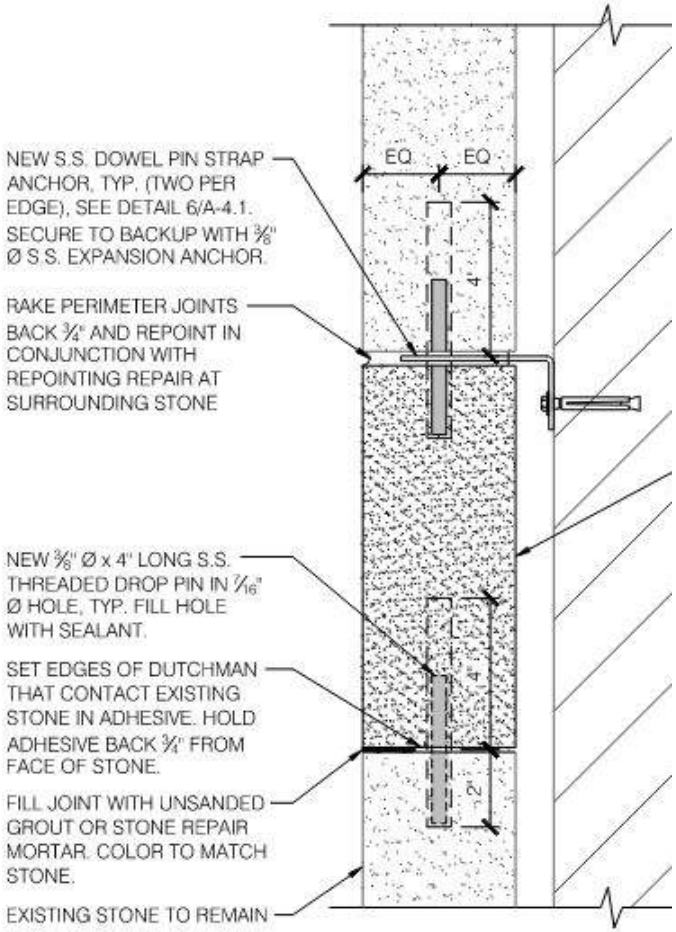

Dutchman Repair

Repair Options

- Stone Mortar Patch
- Stone Dutchman
- Full Replacement

Masonry Maintenance & Repair
Stone Kerf Spalls: Dutchman





Dutchman Repair

- Match existing stone color & texture
- Sawcut damaged area
- Install stainless steel anchorage

Common Issues, Distress, & Deterioration
Freeze-Thaw Damage







Characteristics
- Face Spalling
- Heaving
- Bulging







Common Issues, Distress, & Deterioration

Freeze-Thaw Damage







Masonry Maintenance & Repair
Masonry Rebuild

- Matching Units
  - Size, length
  - Color
  - Texture
- Protection of embedded steel
- Ties or headers
- Tooling of mortar

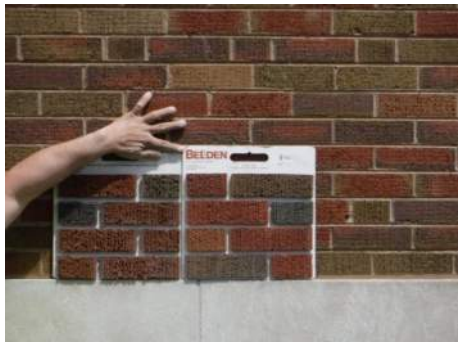







Common Issues, Distress, & Deterioration

Unaccommodated Movement & Differential Support

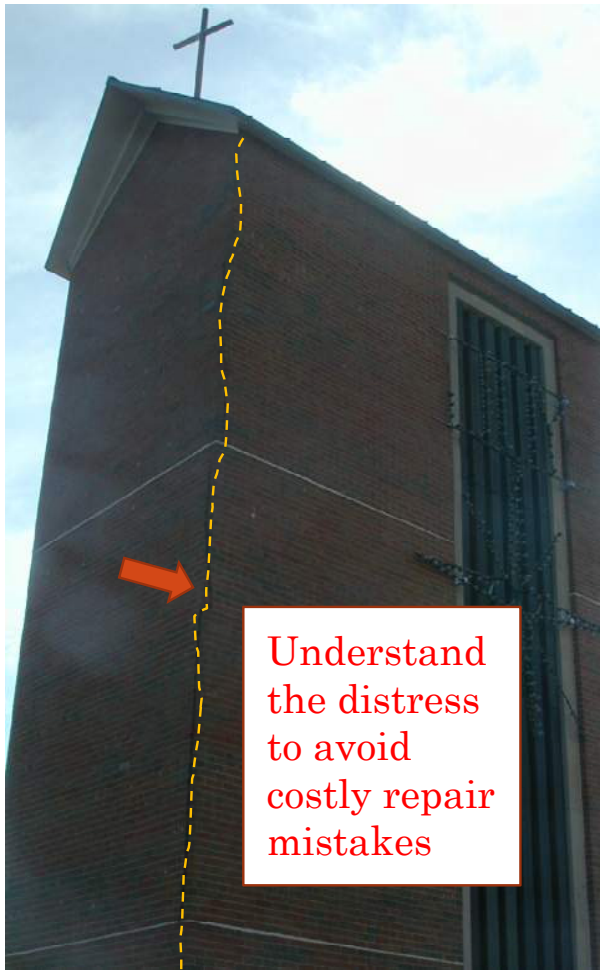

Distress

- Vertical cracking at four corners
- Horizontal cracking at floor levels

Issues

- Discontinuous support
- Inadequate expansion joints







Common Issues, Distress, & Deterioration

Unaccommodated Movement: Shelf Angle Location

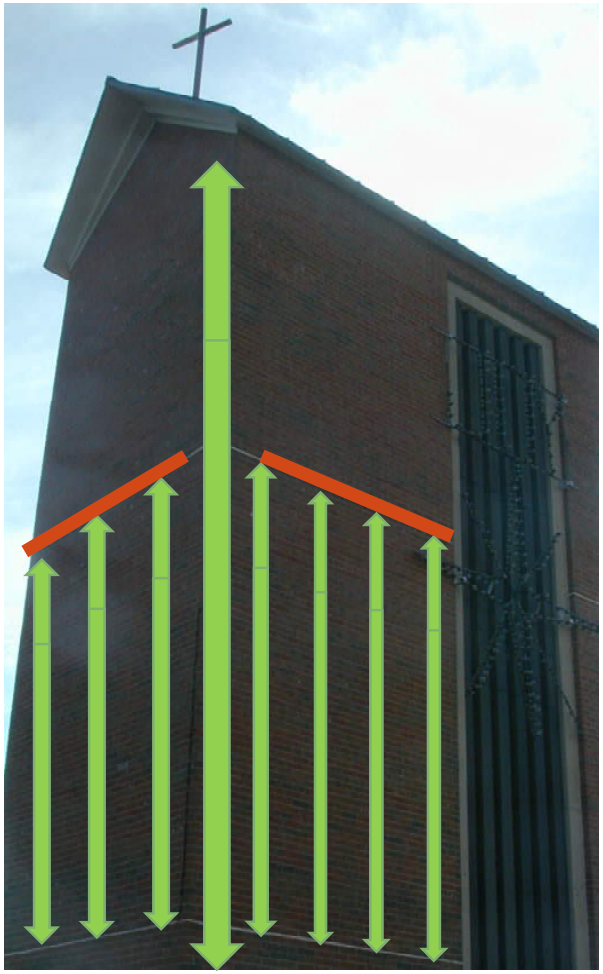

- Shelf angles stop short of corners
- Discontinuous horizontal soft joints
- No vertical soft joints

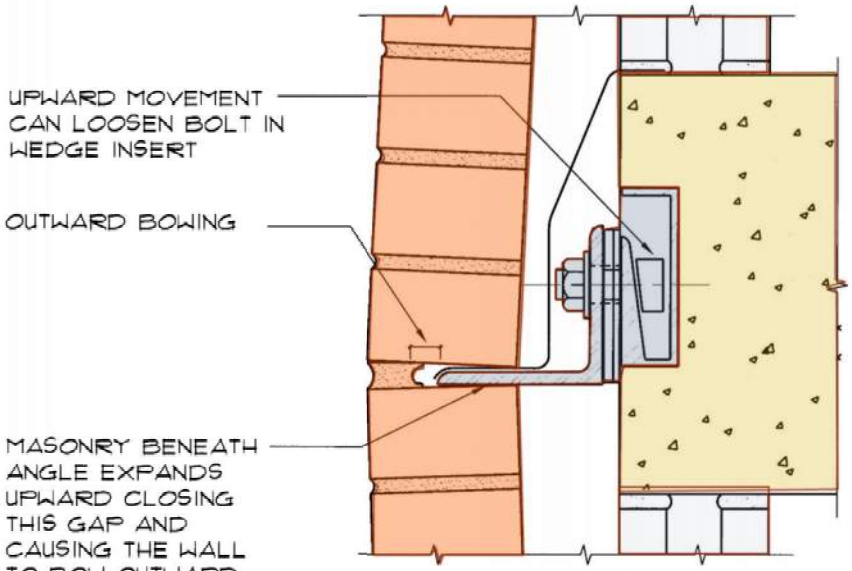

Discontinuous Soft Joint

Masonry Maintenance & Repair
Unaccommodated Movement & Differential Support

Repair Procedures

- Shelf angle extensions
- Vertical expansion joints at corners
- Horizontal expansion joints below shelf angles
- New through wall flashings
- Local brick rebuild

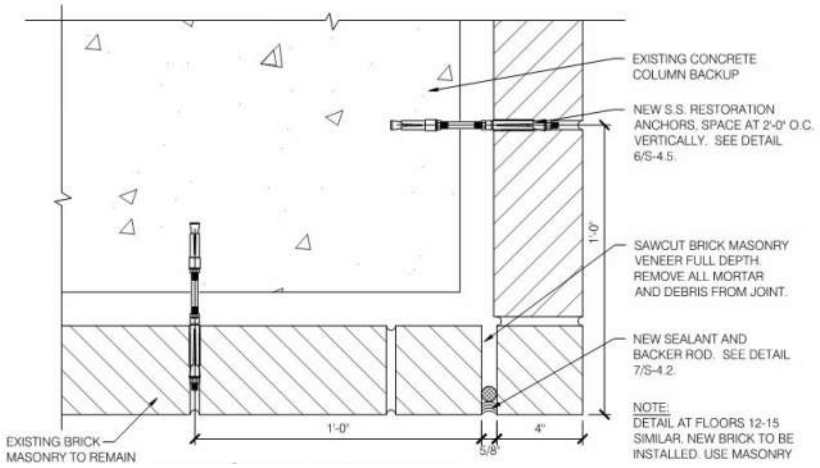

Vertical Expansion Joint Repair

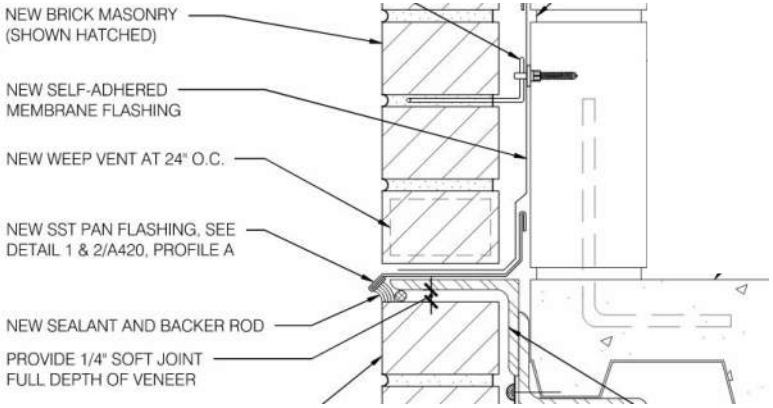

Horizontal Expansion Joint Repair

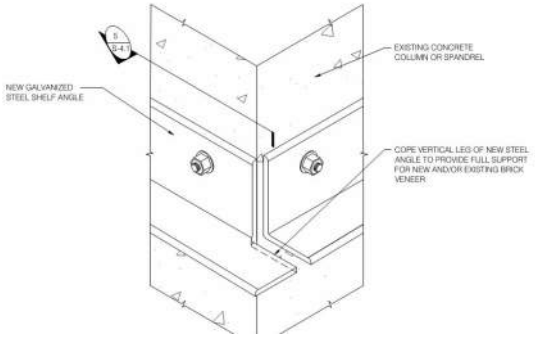

Corner Angle Support

Masonry Maintenance & Repair
Accommodating Differential Movement

Types of Movement

- Thermal movement (all materials)
  - Reversible
  - $k_t = 4x10^{-6}$ in/in F (clay brick)
- Moisture expansion (clay brick)
  - Irreversible
  - $k_e = 3x10^{-4}$ in/in
- Material shrinkage (CMU)
  - Irreversible
  - Approx. $2x10^{-4}$ to $4.5x10^{-4}$ in/in
- Structural movement (all materials)
  - Transient
    - Reversible – Elastic range
    - Irreversible – Inelastic range
  - Long term creep

Coefficient of Thermal Expansion:

Material	Coef of Linear Exp. (in/in F)	Change in Length – 10 ft. section per Δ100 F (inch)
Polycarbonate	38.8×10^{-6}	0.465
Vinyl	33×10^{-6}	0.396
Aluminum	13×10^{-6}	0.156
Stone (Limestone)	7.6×10^{-6}	0.091
Steel	6.7×10^{-6}	0.080
Concrete	5.7×10^{-6}	0.068
Glass	4.7×10^{-6}	0.056
Brick Masonry	4.0×10^{-6}	0.048

Common Issues, Distress, & Deterioration
Unaccommodated Movement



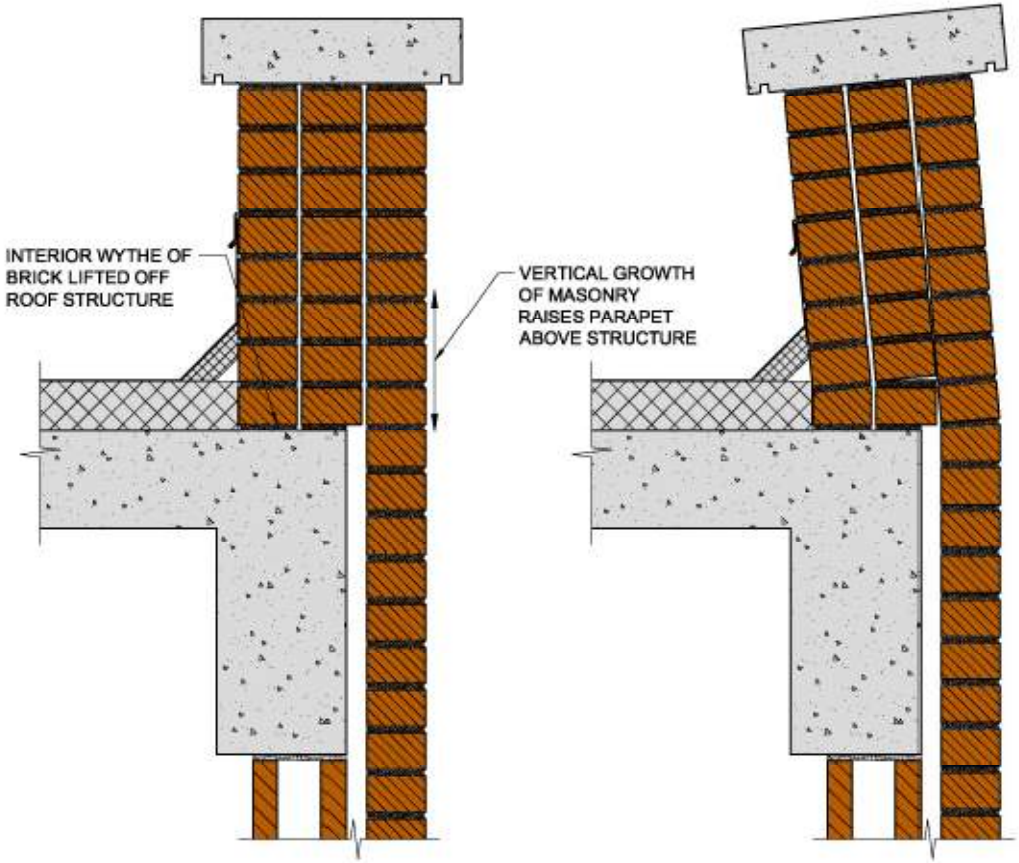

Common Issues, Distress, & Deterioration
Unaccommodated Movement: Veneer w/ Composite Parapet



No horizontal expansion joints in veneer



Masonry Maintenance & Repair

Unaccommodated Movement: Veneer w/ Composite Parapet



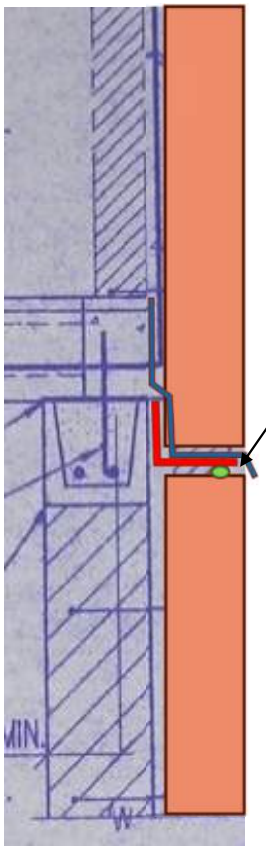

Shelf angle, flashing, & horiz. EJ (soft joint)



New expansion joint locations

Horizontal Soft Joint Procedures

- Remove brick below shelf angle(s)
- Sawcut brick to provide soft joint
- Relay & seal joint

Common Issues, Distress, & Deterioration

Cracking & Shifting: Unaccommodated Movement

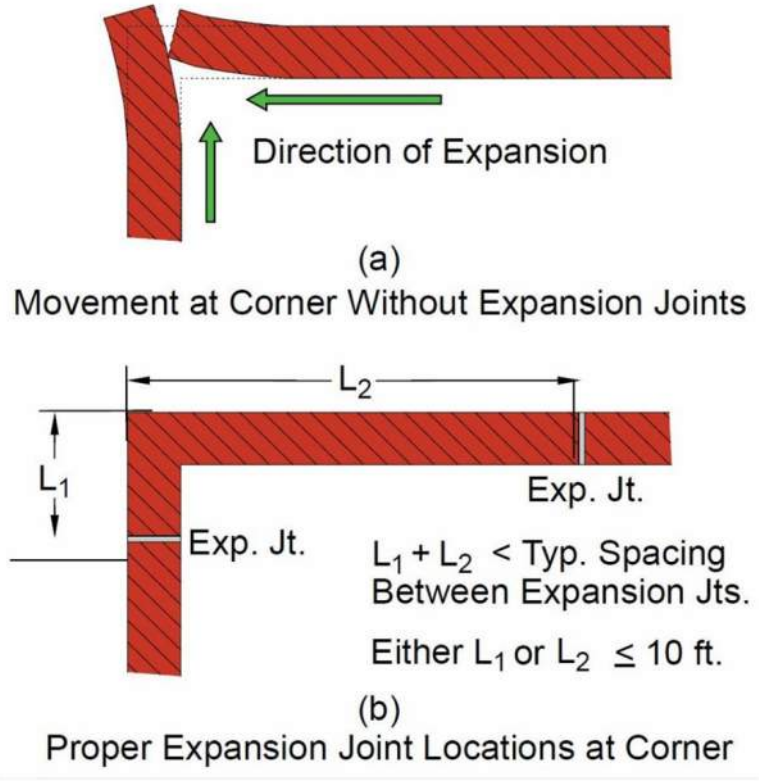

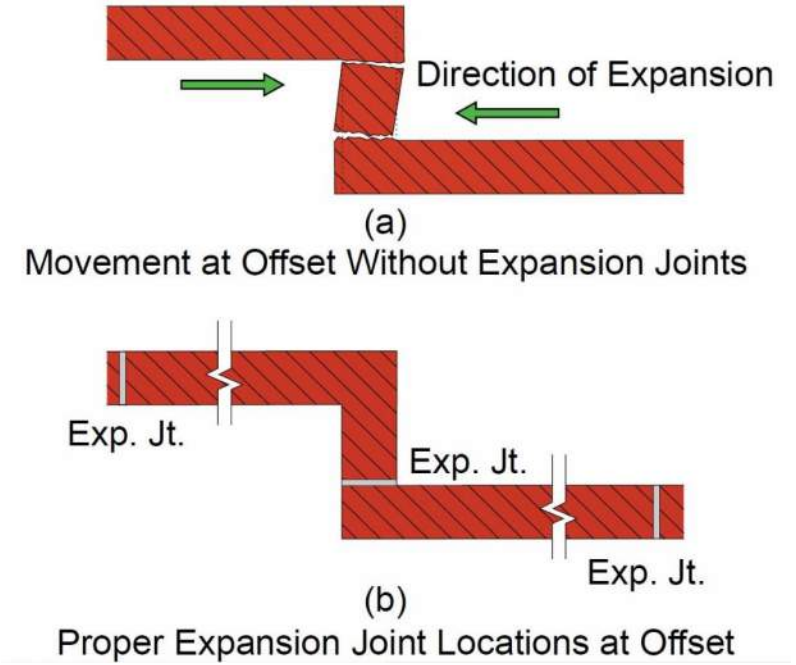

Figure 3 - Vertical Expansion Joints at Corners
BIA Technical Notes on Brick Construction 18A - Accommodating Expansion of Brickwork

Common Issues, Distress, & Deterioration

Masonry Cracking: Settlement



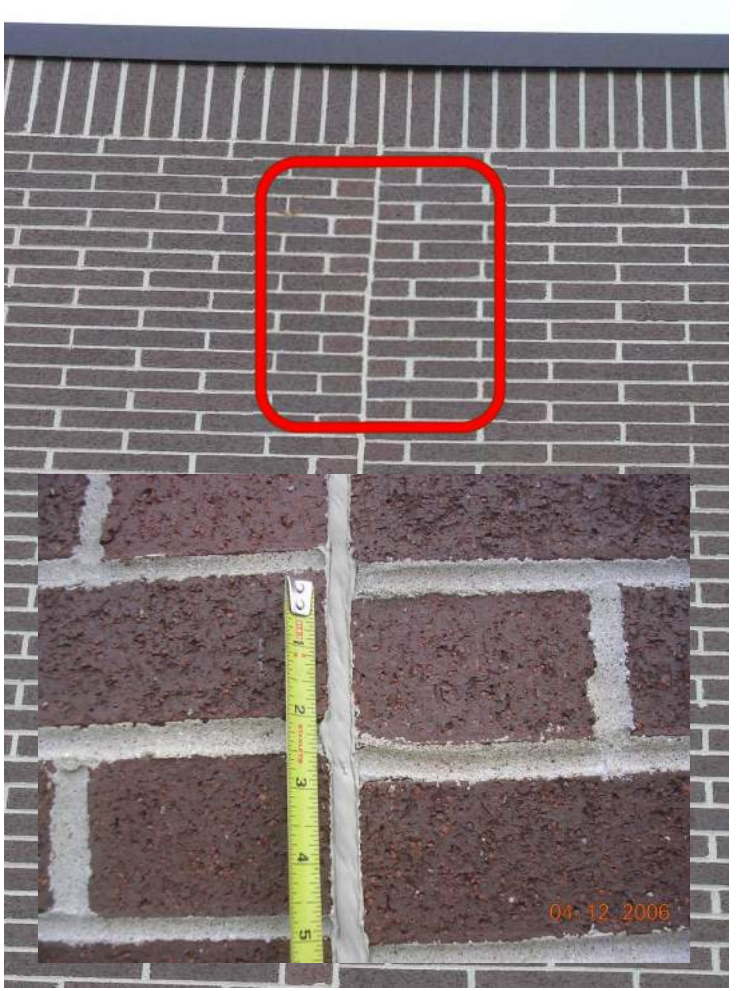

Shearing of sealant across joint

Common Issues, Distress, & Deterioration

Settlement: Investigation Tools



Survey Equipment

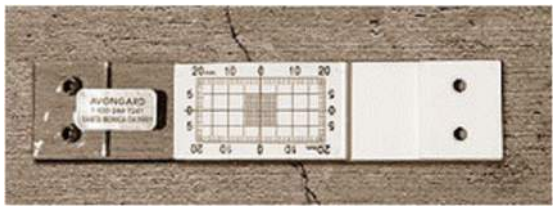

Crack gauge

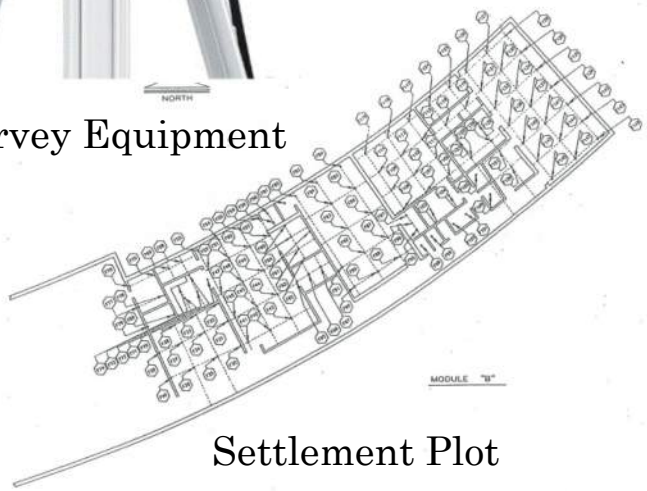

Settlement Plot

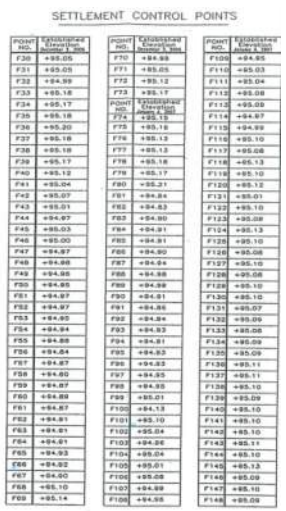

SETTLEMENT CONTROL POINTS

POINT NO.	Established Elevation Border 1 1996
F30	+95.05
F31	+95.05
F32	+94.99
F33	+95.18
F34	+95.17
F35	+95.18
F36	+95.20
F37	+95.18
F38	+95.18
F39	+95.17
F40	+95.12
F41	+95.04
F42	+95.07
F43	+95.01
F44	+94.97
F45	+95.03
F46	+95.00
F47	+94.97
F48	+94.98
F49	+94.95
F50	+94.95
F51	+94.97
F52	+94.97
F53	+94.95
F54	+94.94
F55	+94.88
F56	+94.84
F57	+94.87
F58	+94.80
F59	+94.87
F60	+94.89
F61	+94.87
F62	+94.91
F63	+94.91
F64	+94.91
F65	+94.93
F66	+94.92
F67	+94.90
F68	+95.10
F69	+95.14

POINT NO.	Established Elevation Border 1 1996
F70	+94.99
F71	+95.05
F72	+95.12
F73	+95.17
POINT NO.	Established Elevation Border 2 1997
F74	+95.15
F75	+95.18
F76	+95.13
F77	+95.13
F78	+95.18
F79	+95.17
F80	+95.21
F81	+94.84
F82	+94.83
F83	+94.90
F84	+94.91
F85	+94.91
F86	+94.90
F87	+94.94
F88	+94.98
F89	+94.99
F90	+94.91
F91	+94.86
F92	+94.94
F93	+94.93
F94	+94.91
F95	+94.93
F96	+94.93
F97	+94.95
F98	+94.95
F99	+95.01
F100	+94.13
F101	+95.10
F102	+95.04
F103	+94.96
F104	+95.04
F105	+95.01
F106	+95.08
F107	+94.99
F108	+94.95

POINT NO.	Established Elevation Border 2 1997
F109	+94.95
F110	+95.03
F111	+95.04
F112	+95.08
F113	+95.09
F114	+94.97
F115	+94.99
F116	+95.10
F117	+95.08
F118	+95.13
F119	+95.10
F120	+95.12
F121	+95.01
F122	+95.10
F123	+95.08
F124	+95.13
F125	+95.10
F126	+95.08
F127	+95.10
F128	+95.08
F129	+95.10
F130	+95.10
F131	+95.07
F132	+95.09
F133	+95.08
F134	+95.09
F135	+95.09
F136	+95.11
F137	+95.11
F138	+95.10
F139	+95.09
F140	+95.10
F141	+95.10
F142	+95.10
F143	+95.11
F144	+95.10
F145	+95.13
F146	+95.09
F147	+95.10
F148	+95.09



Masonry Maintenance & Repair
Settlement Repairs: Underpinning







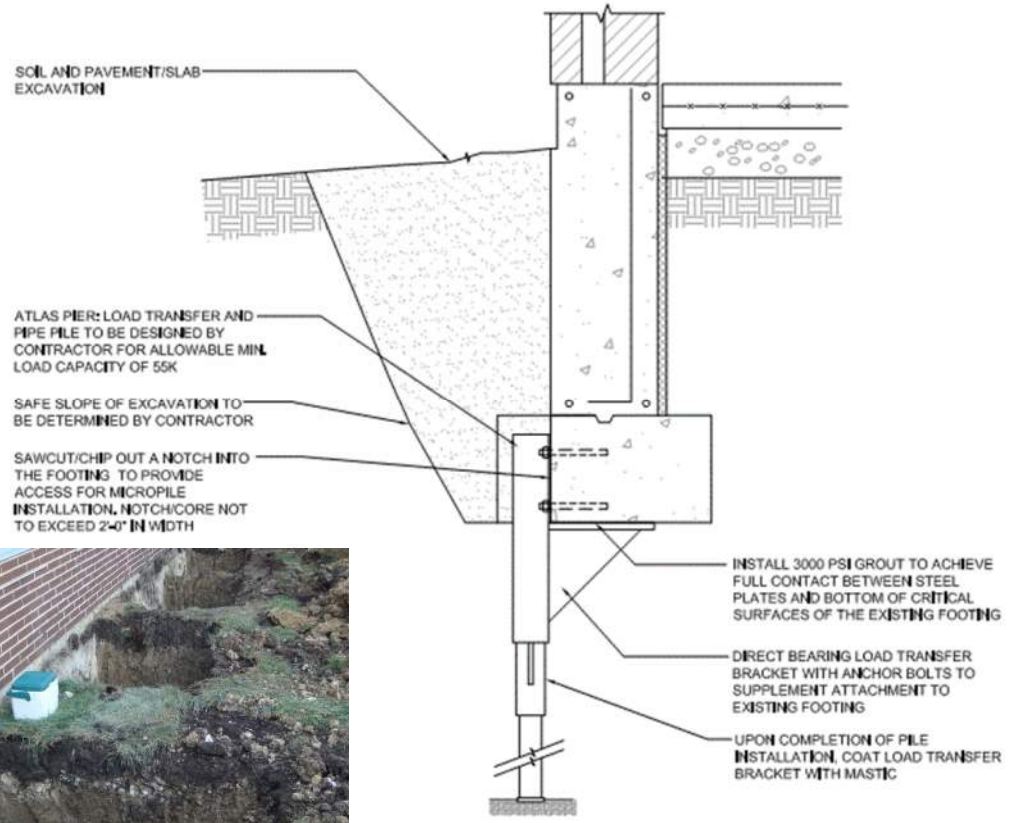

Resistance Piles (Micro-piles)

Common Issues, Distress, & Deterioration

Staining: Efflorescence

"A white, crystalline deposit on the surface of concrete or clay masonry that is comprised of water-soluble salts."

- BIA

Occurs when the following exist:

- Presence of soluble salts
- Frequent wetting or moisture being held
- Masonry pore structure allows migration of salts
- Excessive air exfiltration (or infiltration) through wall



Masonry Maintenance & Repair
Efflorescence

Reduce potential by:

- Material selection
  - Brick, ASTM C67: Rated "Not Effloresced"
  - Mortar, avoid calcium chloride accelerants
- Provide capillary breaks with concrete, CMU, cast stone, etc.
- Minimize water penetration
  - Drain cavity
  - Drip edges and caps
- Maintain continuous air barrier
- Cleaning solutions considerations





Masonry Maintenance & Repair

Sealers

Considerations:

- Not a substitute for properly detailed wall & flashings
- Use in conjunction with other repairs
- Recommended products
  - Penetrating
  - Breathable
    - Silanes
    - Siloxanes
- Requires maintenance (reapplication)









Common Issues, Distress, & Deterioration

Sealant Failures

Sealants

- Commonly first line of defense against moisture infiltration
- Often only line of defense against moisture infiltration

- Requires ongoing maintenance over life of the building





Common Issues, Distress, & Deterioration

Sealant Failures



Cohesive failure



Adhesive failure



Ultra-violet deterioration



Adhesive failure

Common Issues, Distress, & Deterioration
Sealant Failures & Staining

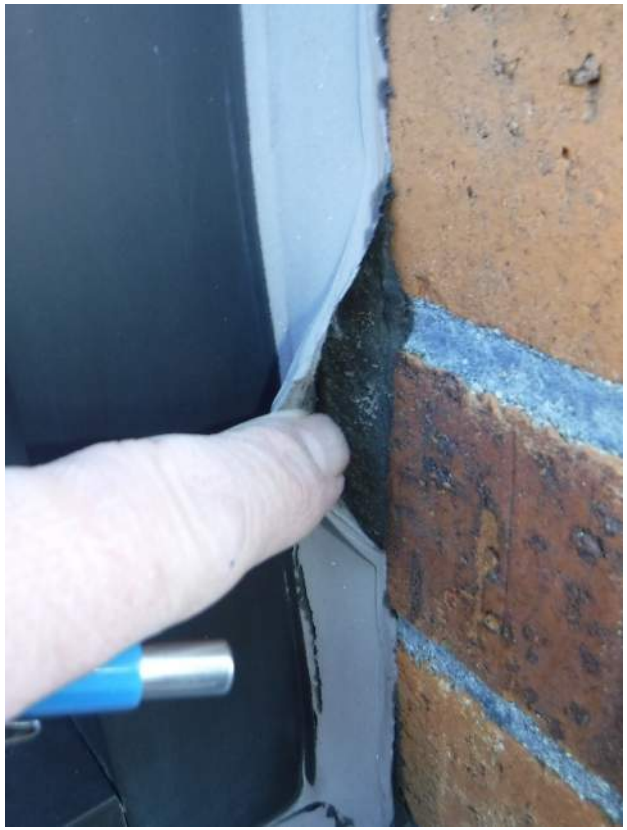

Improper substrate prep



Plasticizer Migration

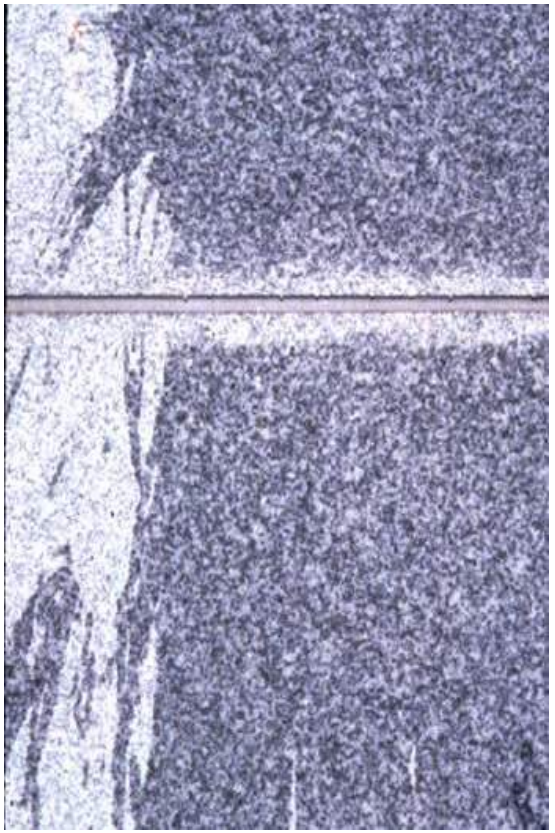

Halo Stain

Masonry Maintenance & Repair
Sealant Considerations

- Expected Movement
  - Sizing joint
- Substrate Compatibility
- Installation conditions
  - Temperature and RH
- Cure Times
- Durability
- Staining & Dirt Pickup
- Paintable





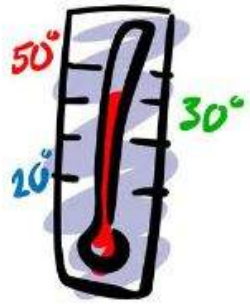



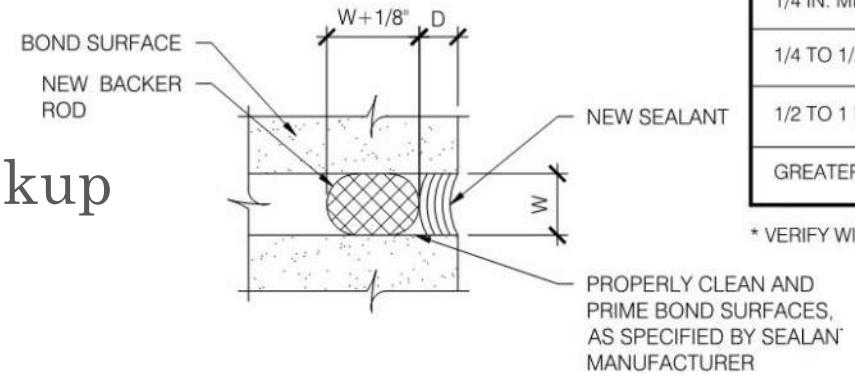

SEALANT CHART GUIDELINE	
W	D*
1/4 IN. MIN.	1/4 IN.
1/4 TO 1/2 IN.	1/4 IN.
1/2 TO 1 IN.	W/2
GREATER THAN 1 IN.	1/2" MAX

* VERIFY WITH SEALANT MANUFACTURER

Outline

- Masonry Overview
  - Types of Masonry (clay brick, concrete, stone)
  - Masonry Systems
    - Mass Wall
    - Composite Masonry
    - Masonry Veneer
- Common Issues, Distress, & Deterioration

  …& Associated Maintenance & Repair
- **Developing a Maintenance Plan**







Developing A Maintenance Plan
Components of the Plan



- Visual Review
  - Yearly*
  - Digital Photo Documentation
  - Survey Sheets
- Walk the Site
  - Exterior Perimeter
  - Interior Levels
  - Roof(s)









Developing A Maintenance Plan
Implementing the Plan

- Be Intentional & Methodical
  - Put it on the calendar
  - Date stamp photos and survey sheets
  - Update survey sheets

- Keep Records
  - Maintenance work
  - Fee proposals / work description
  - Contracts / original documents
  - Repair documents

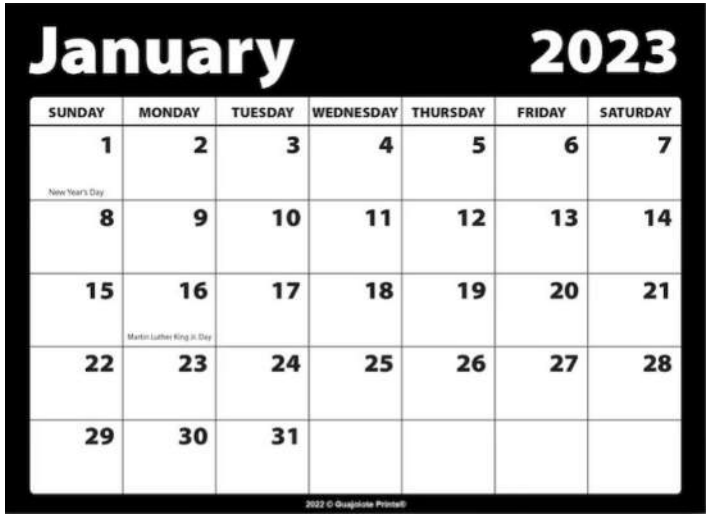







Developing A Maintenance Plan
Documenting the Plan

- Track Anticipated Work & Budget Numbers: Database / Spreadsheets

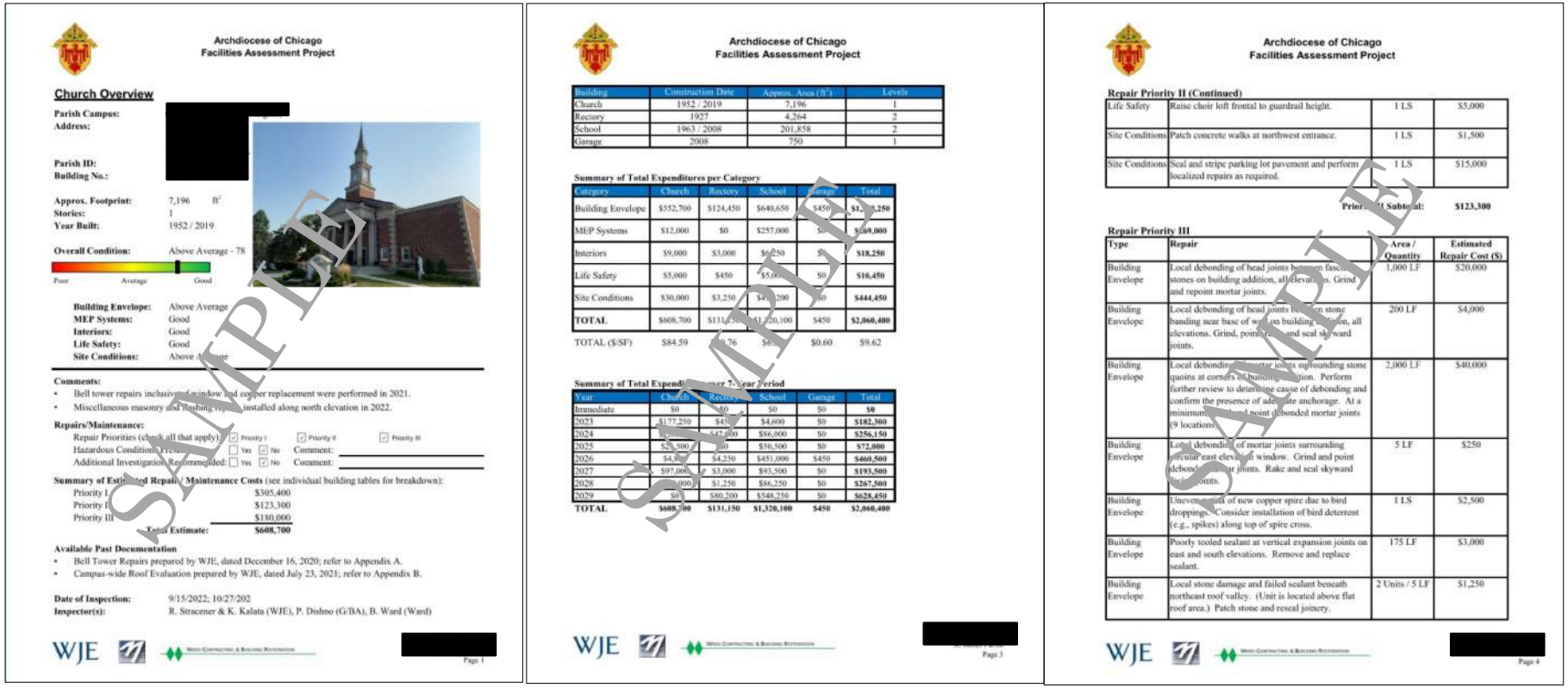

Archdiocese of Chicago
Facilities Assessment Project

Church Overview

Parish Campus: [redacted]
Address:

Parish ID:
Building No.:

Approx. Footprint: 7,196 ft²
Stories: 1
Year Built: 1952 / 2019

Overall Condition: Above Average - 78

Poor Average Good

Building Envelope: Above Average
MEP Systems: Good
Interiors: Good
Life Safety: Good
Site Conditions: Above Average

Comments:
- Bell tower repairs inclusive of window and copper replacement were performed in 2021.
- Miscellaneous masonry and flashing repairs installed along north elevation in 2022.

Repairs/Maintenance:
Repair Priorities (check all that apply): Priority I Priority II Priority III
Hazardous Conditions Present: Yes No Comment:
Additional Investigation Recommended: Yes No Comment:

Summary of Estimated Repair / Maintenance Costs (see individual building tables for breakdown):

Priority I	$305,400
Priority II	$123,300
Priority III	$180,000
Total Estimate:	$608,700

Available Past Documentation
- Bell Tower Repairs prepared by WJE, dated December 16, 2020; refer to Appendix A.
- Campus-wide Roof Evaluation prepared by WJE, dated July 23, 2021; refer to Appendix B.

Date of Inspection: 9/15/2022; 10/27/202
Inspector(s): R. Stracener & K. Kalata (WJE), P. Dishno (G/BA), B. Ward (Ward)

WJE [redacted]

Page 1

Archdiocese of Chicago
Facilities Assessment Project

Building	Construction Date	Approx. Area (ft²)	Levels
Church	1952 / 2019	7,196	1
Rectory	1927	4,264	2
School	1963 / 2008	201,858	2
Garage	2008	750	1

Summary of Total Expenditures per Category

Category	Church	Rectory	School	Garage	Total
Building Envelope	$552,700	$124,450	$640,650	$450	$1,[illegible],250
MEP Systems	$12,000	$0	$257,000	$0	$[illegible],000
Interiors	$9,000	$3,000	$6,250	$0	$18,250
Life Safety	$5,000	$450	$5,000	$0	$10,450
Site Conditions	$30,000	$3,250	$411,200	$0	$444,450
TOTAL	$608,700	$131,150	$1,320,100	$450	$2,060,400
TOTAL ($/SF)	$84.59	$30.76	$6[illegible]	$0.60	$9.62

Summary of Total Expenditures per 7-Year Period

Year	Church	Rectory	School	Garage	Total
Immediate	$0	$0	$0	$0	$0
2023	$177,250	$450	$4,600	$0	$182,300
2024	$[illegible]	$[illegible]	$86,000	$0	$256,150
2025	$[illegible]	$0	$50,500	$0	$72,000
2026	$4,[illegible]	$4,250	$451,000	$450	$460,500
2027	$97,000	$3,000	$93,500	$0	$193,500
2028	$[illegible],000	$1,250	$86,250	$0	$267,500
2029	$0	$80,200	$548,250	$0	$628,450
TOTAL	$608,700	$131,150	$1,320,100	$450	$2,060,400

WJE [redacted]

Page 3

Archdiocese of Chicago
Facilities Assessment Project

Repair Priority II (Continued)

Life Safety	Raise choir loft frontal to guardrail height.	1 LS	$5,000
Site Conditions	Patch concrete walks at northwest entrance.	1 LS	$1,500
Site Conditions	Seal and stripe parking lot pavement and perform localized repairs as required.	1 LS	$15,000
		Priority II Subtotal:	$123,300

Repair Priority III

Type	Repair	Area / Quantity	Estimated Repair Cost ($)
Building Envelope	Local debonding of head joints between fascia stones on building addition, all elevations. Grind and repoint mortar joints.	1,000 LF	$20,000
Building Envelope	Local debonding of head joints between stone banding near base of wall on building addition, all elevations. Grind, point[illegible] and seal skyward joints.	200 LF	$4,000
Building Envelope	Local debonding of mortar joints surrounding stone quoins at corners of building addition. Perform further review to determine cause of debonding and confirm the presence of adequate anchorage. At a minimum[illegible] point debonded mortar joints (9 locations).	2,000 LF	$40,000
Building Envelope	Local debonding of mortar joints surrounding circular east elevation window. Grind and point debonded mortar joints. Rake and seal skyward facing joints.	5 LF	$250
Building Envelope	Uneven wear of new copper spire due to bird droppings. Consider installation of bird deterrent (e.g., spikes) along top of spire cross.	1 LS	$2,500
Building Envelope	Poorly tooled sealant at vertical expansion joints on east and south elevations. Remove and replace sealant.	175 LF	$3,000
Building Envelope	Local stone damage and failed sealant beneath northeast roof valley. (Unit is located above flat roof area.) Patch stone and reseal joinery.	2 Units / 5 LF	$1,250

WJE [redacted]

Page 4

SAMPLE

Report excerpts

Developing A Maintenance Plan
Maintenance Schedule

General Maintenance Schedule*

- Masonry Units: Life of the Building
- Masonry Pointing: 40 years
- Flashings:
  - Stainless steel: Life of Building
  - Copper: 80 years
  - Prefinished Aluminum: 40 years
- Shelf Angles
  - Painted Steel: Dependent on Flashing System
  - Galvanized Steel: 75+ years
- Sealants:
  - Silicone: 15-25 years
  - Polyurethane: 7-10 years
- Masonry Sealers: 5 to 7 years



* Timeframes are approximate & dependent on ongoing maintenance, climate, exposure, and other factors

Developing A Maintenance Plan

Approximate Unit Costs*

Unit Price Repair Costs		
Repair Type	**Unit**	**Cost ($)**
Grinding & Pointing	LF	16
Grinding & Pointing	SF	22
Brick Replacement	Per Unit	50
Brick Rebuild	SF	100
Multi-Wythe Brick Rebuild (2 Wythes)	SF	130
Multi-Wythe Brick Rebuild (3 Wythes)	SF	190
Concrete Masonry Rebuild (assume 8 inch block)	SF	65
Stone Unit Replacement (assume 8 SF)	Per Unit	1,450
Stone Dutchman (2 SF)	Per Dutchman	450
Stone Mortar Patch (0.5 SF)	Per Patch	300
Clean, Prime, and Paint Steel	SF	25
Shelf Angle Replacement & New Flashing	LF	250
Anchorage		
Restoration Anchor	Per Anchor	75
Helical Anchor	Per Anchor	50
Sealant Replacement	LF	14
Cleaning	SF	3.5

Notes:

- Costs listed are a rough order of magnitude for Chicago, IL market.
- Significant fluctuations may occur due to project specific conditions including but not limited to material availability, access, geographical location, available skilled labor, union rates, etc.

Masonry Overview
Masonry Resources















Questions…

Kevin Kalata, RA, SE*
Principal
Wiss, Janney, Elstner Associates, Inc.
847.272.7400 w | 847.226.5399 m
kkalata@wje.com

*(RA – IL, SC; SE – IL)